SHOPPING CENTER LEASE

DATE: July 11, 19 96

LANDLORD: Montrose Crossing, Inc., by:
GFS Realty, Inc., (Dept. #671)
P.O. Box 1804 agent
Washington, D.C. 20013

TENANT: Montgomery County, Maryland (Department of Facilities and
c/o Department of Facilities and Services Services)
110 North Washington Street
Rockville, Maryland 20850

CENTER: Flagship Center, consisting of those parcels of land located in Montgomery County, Maryland, as shown on Exhibit A hereto, as the same may be altered, reduced, expanded or replaced from time to time.
(Shown on Exhibit A)

PREMISES: ~~Store number _____ in the Center, with an address at _____~~ containing _____ sq ft (measured from ~~the center of interior demising walls and from the outside of exterior walls) (Shown crosshatched on Exhibit A.)~~
* (See page 1-a)

In consideration of the agreements in this Lease, Landlord and Tenant agree as follows:

§1. DEFINITIONS AND EXHIBITS

§1.1. Definitions - Certain defined terms in this Lease are presented below:

** (See page 1-a)

~~*a. Common Areas*~~ ~~All areas and facilities in or near the Center provided~~ **by Landlord for common use by the Center's tenants and their customers or used by Landlord for the Center, including parking areas, loading docks, delivery areas, sidewalks, canopies, equipment rooms, courts, landscaped areas, retaining walls, utility facilities, storm water management facilities, stairways, bus stops, lighting facilities, shopping center identification and directional signage, and any other areas and improvements provided by Landlord from time to time for common use by the Center's tenants and their customers; however, except as expressly included above, Common Areas exclude the structural supports, walls, ~~floor slab, and roof of all buildings in the Center~~**

b. Lease Commencement Date — **The date filled in at the top of this page**

c. Possession Date — **The date Landlord delivers possession of the Premises to Tenant (estimated to be August 30, 19 96)**

d. Rent Commencement Date — **The date Tenant opens for business or the 60th day after the Possession Date, whichever is earlier (except that if Tenant is delayed in doing Tenant's Work for a reason beyond its control (such as a strike, lockout, labor trouble, labor, material, or equipment shortage, governmental or quasi-govern-mental law or regulation, power failure, adverse weather, fire, riot, insurrection, or war, but not financial inability) and Tenant notifies Landlord within 3 days after the start of the delay, the Rent Commencement Date is delayed for the length of Tenant's delay)**

Frank Orifici 301-240 FAX 777-1911

e. Lease Term

Starts on the Lease Commencement Date and ends five (5) years after the first day of the first full month following the Rent Commencement Date (may be extended if provided in this Lease) * (See page 2-a)

f. Options to Extend

~~xxxxxxxxxxxxxxxxxxxxxxxxxxxx~~

g. Minimum Rent

Years	Minimum Annual Rent	Monthly Installment
1	$186,800.00	$15,566.67
2	$192,404.00	$16,033.67
3	$198,148.10	$16,512.34
4	$204,079.00	$17,006.58
5	$210,150.00	$17,512.50

~~*h. Percentage Rent*~~ ~~___% of Gross Sales (see §4.3) that exceeds the Base Sales amounts below:~~

Years	~~Annual Base Sales~~	~~Quarterly Base Sales~~

i. Tenant's Business

The sale at retail of alcoholic beverages (beer, wine and liquor) for off premises consumption and as ancillary thereto, the sale of products related to the consumption of alcoholic beverage products and for no other use or purpose

j. Tenant's Trade Name

Montgomery County Liquor and no other name

k. Security Deposit

$ N/A

l. Pro-rata Share

The share of CAM costs (see §5.3) and RET (see §4.4) Tenant must pay to Landlord under this Lease, which share is a fraction with a numerator equal to the gross

leasable area of the Premises and a denominator either equal to (i) the total gross leasable area in the Center (for gross CAM costs and RET charged to all tenants in the Center using the same formula), or (ii) the total gross leasable area in the Center less the gross leasable area in buildings other than the building in which the Premises are located (for net CAM costs and RET (after deducting CAM costs and RET attributable to the other buildings) charged to the tenants in the building in which the Premises are located), both of which denominators change as the total gross leasable area in the Center changes

* (See page 3-a)

§1.2. **Exhibits** - The exhibits to this Lease are listed below and are made a part of this Lease as if they were set forth in full in this Lease:

Exhibit A	Site Plan of Center
Exhibit B	Landlord's Work
Exhibit C	Rules and Regulations
Exhibit D	Sign Criteria
Exhibit E	Declaration of Occupancy
~~Exhibit F~~	~~Form of Corporate Resolutions and Attorney's Opinion~~

** (See page 3-a)

~~Notwithstanding anything to the contrary in this Lease, Landlord may~~ design and decorate any part of the Center as it desires and may ~~change~~ the size and dimensions of any part of the Center, including the number, location and dimensions of buildings and stores, ~~dimensions~~ of hallways, malls and corridors, the number of floors in any building, the location, size and number of tenant spaces and ~~kiosks~~ that may be erected in any part of the Center, the identity, type and location of other stores and tenants, and the size, shape, ~~location, areas, facilities, and arrangement of Common Areas.~~ *** (See page 3-a)

§2. PREMISES AND TERM

§2.1. **Premises** - Landlord, as the land owner, ground lessee, or the owner's or ground lessee's agent, as applicable, leases the Premises to Tenant and Tenant rents them from Landlord. As long as Tenant performs its obligations under this Lease, Tenant may peaceably and quietly hold and enjoy the Premises for the Lease Term without interruption by Landlord. Landlord shall construct the Premises in substantial accordance with plans and specifications listed in Exhibit B ("Landlord's Work"). Landlord may use the roof and the side and rear walls of the Premises for any purpose, including erecting signs or other structures on or over the Premises, and leading ducts, conduits and wires that serve other parts of the Center through, to or from the Premises in locations that do not materially interfere with Tenant's use of the Premises. Tenant may not use the exterior of exterior walls or the roof of the Premises or any part of the Center outside the Premises, except as provided in §5.1.

§2.2. **Term; Lease Year** - This Lease commences on the Lease Commencement Date and expires on the last day of the Lease Term described in §1.1.(e). A "Lease Year" is a 12 month period during the Lease Term that begins January 1 and ends December 31. The periods from (a) the Rent Commencement Date through the first December 31 of the Lease Term and (b) the last January 1 of the Lease Term through the end of the Lease Term are partial Lease Years. All amounts due under this Lease during partial Lease Years are prorated (with all months considered as having 30 days).

~~§2.3. Option Term - If provided in §1.1(f), and subject to the conditions~~ of this ~~§2.3,~~ Tenant may extend the Lease Term the number of times as provided in §1.1(f), each time for the number of years as provided in §1.1(f). Tenant may not exercise an Option to Extend if Tenant is in default under this Lease at the time of exercise. In addition, Tenant's exercise of an Option to Extend is void if (a) Tenant is in default under this Lease at any time during the 2 years ~~before the extension term is to commence; or (b) Gross Sales for any of the 4~~

m.	Gross Leasable Area in the Center	The aggregate amount of square feet of leasable floor area from time to time located in the Center and designed and which may be legally occupied for the exclusive use and occupancy of retail tenants (with respect to premises leased to retail tenants to be determined from the amount of square feet set forth in the individual leases, and with respect to the remaining leasable floor area to be calculated in the same manner as the gross leasable area of the Premises; specifically excluding Common Areas, storage areas (other than storage area located within premises leased to retail tenants), and areas used for Landlord's management offices).
**	Exhibit G	Plan Depicting Future Dedication Areas
***		Notwithstanding anything to the contrary in this Lease, Landlord, from time to time, may (a) design and decorate any part of the Center as it desires, (b) make or permit changes or revisions in the plan for the Center, including, but not limited to, additions to, subtractions from, rearrangements of, alterations, modifications of, or supplements to, the building areas, walkways, driveways, parking areas, if any, or other Common Areas, (c) construct other buildings or improvements in the Center, or demolish same, (including any portion of the Common Areas) and make alterations thereof or additions thereto (including any portion of the Common Areas) and build additional stories on or in any such building(s) (or Common Areas) and build adjoining same, or construct additional deck or elevated parking facilities, (d) temporarily or permanently close portions of the Common Areas in connection with any such construction, building or demolition, (e) acquire, lease or obtain easements in additional property or properties which Landlord, at Landlord's sole election, may include within the Center as Common Areas or otherwise, (f) make or permit changes or revisions in the Center, including additions thereto and alterations thereof, (g) change the size and number of tenant spaces and kiosks that may be erected in any part of the Center and the identity, type and location of other stores and tenants, and (h) add or remove land and/or improvements from the Common Areas and/or the Center. No exercise by Landlord of any rights herein reserved shall entitle Tenant to any compensation, damages or abatement of rent from Landlord for any injury, inconvenience or loss of business thereby, provided that Landlord makes reasonable efforts to complete any work or repairs in a timely manner.

* In the event that Tenant does not open its business in the Premises within sixty (60) days following the Rent Commencement Date, Landlord may elect to terminate this Lease by written notice to Tenant. Such termination shall be effective upon the thirtieth (30th) day following Tenant's receipt of such notice.

~~shall keep Tenant's Records for the most recent 12 quarters at Tenant's Notice~~ Address (see §17.9) (and at the Premises during the Lease Term if the Notice Address is more than 100 miles from Washington, D.C.).

Landlord or its agents may examine and audit Tenant's Records at Tenant's Notice Address (see §17.9) (or at the Premises if the Notice Address is more than 100 miles from Washington, D.C.). If the examination or audit discloses a deficiency in Percentage Rent payments, Tenant shall pay it within 5 days after notice of the deficiency. If the deficiency is 1% or more of the Percentage Rent paid by Tenant for the period, Tenant also shall pay Landlord the cost of the audit or examination. If the deficiency is 3% or more of the Percentage Rent due for the period of the deficiency, Landlord may terminate this Lease.

If Tenant fails to furnish its Gross Sales report for any period, Landlord may charge a $100.00 late fee to cover additional administrative expenses. ~~In addition, Landlord may examine Tenant's Records at Tenant's expense to compute Gross Sales and Percentage Rent due for that period, or may require Tenant to pay Percentage Rent using as Gross Sales for that period 125% of the greater of (a) the Base Sales for that period, or (b) Gross Sales for the corresponding period in the prior Lease Year.~~ Landlord's exercise of any remedy in this paragraph does not relieve Tenant of the obligation to submit the required Gross Sales reports ~~and to pay the Percentage Rent due based on those sales (with credit for any amounts paid under this paragraph).~~

If Tenant submits a delinquent Gross Sales report, Landlord may not honor it unless (i) a reputable, independent certified public accountant or accountant practitioner states it is fair and accurate based on their examination of Tenant's Records; and (ii) Percentage Rent due under the prior paragraph has been paid. If the accountant's statement reflects that Tenant has paid excess Percentage Rent, Landlord shall apply the excess against any Percentage Rent due for past periods, or for future periods as it becomes due (or shall refund the excess to Tenant if the Lease Term has terminated and Tenant has paid all amounts it owes to Landlord).

§4.3. Gross Sales - "Gross Sales" are the price of all goods sold and rented and of services performed at or from the Premises for cash, credit, exchange or otherwise, including (i) goods sold and rented and services performed outside the Premises if the orders are handled at the Premises or are connected with actions in or from the Premises; and (ii) goods sold and rented and services performed at or from the Premises if the orders are handled outside the Premises; whether the orders are taken in person, or by mail, telephone, or otherwise.

Tenant may deduct from Gross Sales:

(a) exchanges of merchandise between Tenant's stores and deliveries from the Premises to fill orders that do not originate at or from the Premises, but only if such exchanges and deliveries are made solely for the convenient operation of Tenant's Business and not to avoid consummating a sale in, at or from the Premises;

(b) returns to manufacturers;

(c) refunds to customers;

(d) sales of fixtures, machinery, and equipment not in the ordinary course of Tenant's business; and

(e) sales, excise, and other taxes imposed by governmental authority and collected from Tenant's customers and paid to the authority by Tenant.

Tenant may not deduct from Gross Sales any other items, including:

(A) taxes, except as provided in this Lease;

(B) returned checks and reserves and deductions for uncollected amounts;

(C) register shortages; and

~~(D) deposits not refunded to customers.~~

§4.4. Real Estate Taxes - Subject to reimbursement as set forth in this section, Landlord shall pay the real estate taxes ("RET") on the Center. RET includes all real estate taxes, charges and assessments by governmental and quasi-governmental authorities (including community and homeowners' associations), front-foot benefit charges, special assessments, sewer and other taxes and charges, all other amounts listed on the tax bill for the Center (such as water and sewer service, school and fire district taxes, fire line charges, and capital facilities charges), substitutions or partial substitutions for or additions to RET, rents taxes or other tax or charge (other than income tax) imposed on account of the payment by Tenant or receipt by Landlord of, or based in whole or in part on, the rents in this Lease, or the value of those rents or on Landlord's interest in the Center, and all costs and fees incurred by Landlord to contest or negotiate the RET with public authorities. RET excludes taxes on Tenant's machinery, equipment, inventory or other personal property or assets (which taxes Tenant shall pay directly to the taxing authority).

imposed on the Center or the Common Areas, including off-site facilities benefitting the Center,

* (See page 7-a)

Tenant shall pay to Landlord its Pro-rata Share of RET within 30 days after notice from Landlord of the amount Tenant owes (with proportionate reduction for periods at the beginning and end of the Lease Term that are not full fiscal tax years of the taxing authority).

Landlord may require Tenant to pay its Pro-rata Share of RET in monthly installments in advance on the 1st day of each month, in amounts estimated periodically by Landlord. After the last tax payment to the taxing authority each year, Landlord shall compute Tenant's share of annual RET. Landlord shall credit any excess to amounts to be paid during the following year (or shall refund the excess to Tenant if the Lease Term has terminated and Tenant has paid all amounts it owes to Landlord), or Tenant shall pay any deficiency to Landlord, as the case may be.

~~§4.5. Security Deposit - On the Lease Commencement Date, Tenant shall~~ pay the Security Deposit to Landlord, and Landlord shall hold it as security for Tenant's performance under this Lease. Landlord may hold the Security Deposit without liability for interest, unless required by law, and may deposit the Security Deposit in an account containing other security deposits and other moneys controlled by Landlord or its affiliates. If Tenant defaults under this Lease, Landlord may apply all or any part of the Security Deposit to compensate Landlord for its loss, cost, damage or expense connected with the default, and at Landlord's request, Tenant shall pay to Landlord within 5 days the amount necessary to restore the Security Deposit to the original amount. Unless Tenant is in default at the end of the Lease Term, Landlord shall return the balance of the Security Deposit to Tenant after the end of the Lease Term, within 30 days ~~after Tenant's request.~~

§4.6. Additional Rent; Late Payment - All amounts that Tenant is required to pay under this Lease, including RET (see §4.4), insurance, CAM Costs (see §5.2), ~~merchants' association~~ dues, advertising fees, and expenses to cure Tenant's default, are additional rent payable with the next Monthly Installment of Minimum Annual Rent that becomes due (or at the end of the Lease Term, if sooner), except as otherwise provided in this Lease. Tenant's failure to pay any of these amounts constitutes its failure to pay rent, and they may be collected as provided by law for the collection of rent. Tenant shall pay all rent without prior notice or demand. Tenant's agreements to pay rent and other amounts under this Lease are independent covenants, and, except as this Lease provides otherwise, Tenant may not setoff, abate, deduct or fail to pay any such amounts for any reason. Any rent or additional rent to be paid by Tenant that is not paid when due bears interest at the lesser of: (a) the rate charged by large U.S. money center commercial banks, from time to time, as published in the Wall Street Journal (or as fixed in Landlord's reasonable opinion if the Wall Street Journal ceases publishing that rate); or (b) the maximum rate allowed by law. In addition, for each late payment of rent or additional rent, Tenant shall pay a late payment processing charge of $50.00 if the payment is received by Landlord less than 10 days after it is due, or $150.00 if the payment is received 10 days or more after it is due; and Tenant shall also pay a notice processing fee of $150.00 if Tenant's payment is received by Landlord after Landlord has sent Tenant notice of that failure to make timely payment.

Promotional Fund

** (See page 7-a)

* To the extent that any portion of the Common Areas, including off-site facilities, are intended for use and used by adjacent improved properties constituting part of the integrated development which includes the Shopping Center, Landlord, in Landlord's reasonable discretion, shall allocate to such adjacent improved properties a portion of the real property taxes and assessments attributable to such portion of the Common Areas, all as determined by Landlord.

** Notwithstanding the foregoing, Landlord agrees to waive the late payment processing charge for the first two (2) instances in any twelve (12) month period during the Lease Term, provided payment is received by Landlord within fifteen (15) days after the due date.

§5. COMMON AREAS AND CAM COSTS

§5.1. Use of Common Areas - Landlord retains exclusive control and management of the Common Areas, and Landlord may establish reasonable rules and regulations for the Common Areas, which Landlord may amend. Landlord may change the level or grade of parking surfaces and may build subsurface or elevated parking areas; may charge for parking (by meters or otherwise); may close any Common Areas temporarily to make repairs or changes, to prevent the acquisition of public rights, to discourage noncustomer parking, or for any other purposes; and may do other things in the Common Areas as Landlord in its ~~sole~~ reasonable discretion deems advisable.

may enter into, modify and terminate easements and other agreements pertaining to the use and maintenance of the Common Areas; may add to or subtract from the Common Areas;

Tenant, its employees and customers may use the Common Areas in common with Landlord and all others entitled to use the Common Areas, subject to the prior paragraph. Tenant may not interfere with any person's use of the Common Areas. Tenant shall abide by the rules and regulations in Exhibit C (as amended) and shall cause its concessionaires, employees, agents, and customers to abide by them.

If Landlord designates an area for parking by Tenant's employees, Tenant shall cause its employees to park there and shall pay Landlord $10.00 for each day that Tenant or its employee parks a car in the Center outside that area. Tenant authorizes Landlord to tow any such car from the Center. Tenant shall reimburse Landlord for the towing costs and shall otherwise indemnify Landlord against any loss, claim, or expense connected with the towing or the improperly parked car. At Landlord's request, Tenant shall furnish Landlord license numbers and descriptions of cars used by Tenant and its concessionaires, employees, and agents. * (See page 8-a)

§5.2. Maintenance of Common Areas - Landlord shall maintain, repair and replace (when necessary) the Common Areas at the level deemed advisable by Landlord, in its sole discretion. However, if the need for maintenance, repair, or replacement is connected with the negligence of Tenant, its employees, agents, contractors; or with Tenant's failure to do anything it is required to do under this Lease, or its doing anything it is not permitted to do under this Lease (whether or not the failure or the doing has continued long enough to constitute a default); or with vandalism, malicious mischief, or actual or attempted robbery, burglary, or safe burglary, against which Tenant is required to insure, Landlord either may require Tenant to pay the cost of the maintenance, repair, or replacement, or may require Tenant to do the maintenance or make the repair or replacement. If Landlord notifies Tenant that Tenant must do the maintenance or make the repair or replacement, Tenant shall submit its plans or procedures for the maintenance, repair, or replacement to Landlord for its approval within 5 days after Landlord's notice and shall do the maintenance or make the repair or replacement as soon as reasonably practicable after Landlord approves Tenant's plans or procedures. In addition, Tenant shall promptly remove ice and snow from Tenant's loading area and from the sidewalk in front of the Premises and shall collect refuse outside the Premises as required in §8.4.

~~**§5.3. CAM Costs** - 'CAM Costs' are all of Landlord's costs to operate the~~ Center and to and maintain, repair and replace (when necessary) the Common Areas, including: (a) costs (and appropriate reserves) to operate, police, protect, inspect, manage, and light (including maintaining and illuminating signs) the Center; (b) costs (and appropriate reserves) to clean, sweep, remove snow and ice from, remove trash from, resurface, paint, restripe, landscape, renovate, remodel, repair, and replace the Common Areas and any machinery and equipment used to do these things; (c) costs to provide liability, property, and other insurance coverage for the Center; (d) costs for special services for the Center, such as for music program services and loud speaker systems (including ASCAP and BMI union fees) and for security measures; (e) water and sewer charges, energy surcharges, wages, unemployment taxes, social security taxes, workman's compensation insurance and other benefits payable to employees of Landlord or its affiliates at the Center; and (f) assessments attributable to the Common Areas (unless charged to Tenant under §4.4), personal property taxes, fees for required licenses and permits, supplies, and salaries and other compensation of personnel to do the things listed in this section; plus 15% of the total of all of the ~~foregoing costs and expenses to cover Landlord's administrative costs.~~ **(See page 8-a)

* Notwithstanding the foregoing, Tenant shall not be obligated to pay such $10.00 and Landlord shall not tow any violating car until the third violation of this Section.

** **§5.3. CAM Costs** - "CAM Costs" are all of Landlord's costs to operate the Center and to maintain, repair and replace (when necessary) the Common Areas, including, but not limited to: (a) costs (and appropriate reserves) to operate, police, protect, inspect, manage, and light (including maintaining and illuminating signs, fountains, sculptures, imaging and awnings) the Center; (b) costs (and appropriate reserves) to clean, sweep, remove snow and ice from, remove trash from, resurface, paint, restripe, landscape, renovate, remodel, repair, and replace the Common Areas and any machinery and equipment used to do these things; (c) costs to provide liability, property, and other insurance coverage for the Center; (d) costs for special services for the Center, such as for sprinkler monitoring systems, alarm and life safety systems, music program services and loud speaker systems (including ASCAP and BMI union fees), holiday decorations and for security measures; (e) water and sewer charges, energy surcharges, wages, unemployment taxes, social security taxes, workman's compensation insurance and other benefits payable to employees of Landlord or its affiliates at the Center, (f) surcharges levied upon or assessed against parking spaces or areas by governmental or quasi-governmental authorities; payments toward mass transit or car pooling facilities or otherwise as required by governmental or quasi-governmental authorities (unless charged to Tenant under §4.4); (g) costs and expenses in connection with maintaining federal, state and local governmental ambient air and environmental standards; (h) assessments attributable to the Common Areas (unless charged to Tenant under §4.4), personal property taxes, fees for required licenses and permits, supplies, and salaries and other compensation of personnel to do the things listed in this section, and (i) charges payable or costs allocated to the Center under any reciprocal easement agreement or declaration; plus 15% of the total of all of the foregoing costs and expenses to cover Landlord's administrative costs. To the extent that any portion of the Common Areas are intended for use and used by adjacent improved properties constituting part of the integrated development which includes the Shopping Center, Landlord in Landlord's reasonable discretion, shall allocate to such adjacent improved properties a portion of the CAM Expenses attributable to such portion of the Common Areas, all as determined by Landlord.

§5.4. Tenant's Share of CAM Costs - Tenant shall pay its Pro-rata Share of CAM Costs for a Lease Year in monthly installments, in amounts estimated by Landlord, on the first day of each month of that Lease Year. After each Lease Year, Landlord shall notify Tenant of its share of CAM Costs for that year (with proportionate reduction for periods at the beginning and end of the Lease Term that are not full Lease Years). Landlord shall credit any excess to amounts to be paid by Tenant for the following year (or shall refund the excess to Tenant if the Lease Term has terminated and Tenant has paid all amounts it owes to Landlord), or Tenant shall pay any deficiency to Landlord, as the case may be.

~~§5.5. Trash Pickup - If Landlord provides trash pickup service for the~~ Center, Tenant shall use the service and shall pay its share of the costs of the service. Tenant's share of trash pickup costs is the same percentage as the percentage use by Tenant of the trash pickup service, as determined by Landlord in its reasonable opinion, based on amount and type of trash, frequency of pickup, and other relevant factors. Tenant shall pay its share of trash pickup costs in installments payable not more frequently than monthly, with annual adjustment if estimates were used to fix Tenant's installments and if those estimates differ from amounts. Landlord shall credit any excess to amounts to be paid by Tenant for the following year (or shall refund the excess to Tenant if the Lease Term has terminated and Tenant has paid all amounts it owes to ~~Landlord), or Tenant shall pay any deficiency to Landlord, as the case may be.~~

Tenant shall maintain a contract for trash pick-up twice each week.

§6. MAINTENANCE OF PREMISES

§6.1. Maintenance by Landlord - Except as provided by §13 (re: casualty) and §14 (re: condemnation), Landlord shall maintain, repair and replace (when necessary) the structural supports, interior demising walls, exterior walls, floor slab, and roof of the Premises to keep them in good, safe, and clean condition. However, if the need for maintenance, repair, or replacement is connected with the negligence of Tenant, its employees, agents, contractors; or with Tenant's failure to do anything it is required to do under this Lease, or its doing anything it is not permitted to do under this Lease (whether or not the failure or the doing has continued long enough to constitute a default); or with vandalism, malicious mischief, or actual or attempted robbery, burglary, or safe burglary, against which Tenant is required to insure, Landlord either may require Tenant to pay the cost of the maintenance, repair, or replacement, or may require Tenant to do the maintenance or make the repair or replacement. If Landlord notifies Tenant that Tenant must do the maintenance or make the repair or replacement, Tenant shall submit its plans or procedures for the maintenance, repair, or replacement to Landlord for its approval within 5 days after Landlord's notice and shall do the maintenance or make the repair or replacement as soon as reasonably practicable after Landlord approves Tenant's plans or procedures. Landlord is not obligated to do any other maintenance or to make any other repairs, replacements or improvements to the Premises or to any equipment or fixtures in the Premises.

§6.2. Maintenance by Tenant - Except as provided by §§13 and 14 (dealing with damage by casualty and with condemnation), except for reasonable wear and tear, and except as provided by §6.1 (dealing with Landlord's maintenance obligation), Tenant shall maintain, repair and replace (when necessary) the Premises (including the HVA/C system and other utility systems, interior non-demising walls, vestibules, windows, window frames and moldings, plate glass, doors, and door openers and fixtures) and any facilities outside the Premises that serve the Premises (such as Tenant's sign and sign box and the HVA/C fan and compressor) to keep them in good, safe, and clean condition. Tenant shall replace parts of or the entire HVA/C system when, in the judgment of an independent mechanical engineer, replacement (not repair) makes economic sense.

§6.3. Surrender of Premises - When this Lease terminates, Tenant shall surrender the Premises in the same condition they were in on the Rent Commencement Date, except as provided in §6.2. Tenant also shall deliver to Landlord at its Notice Address (see §17.9) all keys for the Premises and all combinations for locks, safes and vaults in the Premises. (reasonable wear and tear excepted)

§7. UTILITIES

§7.1. **Payment** - After the Possession Date, Tenant shall pay promptly all charges for sewer, gas, electricity, water and all other utility services for the Premises, whether supplied by Landlord or by a public utility.

§7.2. Service - ~~Tenant shall change all HVA/C filters at least once a~~ month. Tenant shall contract with a reputable HVA/C firm ~~approved~~ by Landlord to inspect and service the HVA/C system. ~~At least~~ twice each Lease Year, Tenant shall have the HVA/C ~~system~~ inspected by the firm and shall obtain from the firm a ~~written~~ inspection report. Tenant shall keep the service contract and ~~the report at the Premises and shall furnish copies to Landlord on request.~~

Tenant shall contract with its own HVA/C mechanics to properly maintain the HVA/C system serving the Premises.

§7.3. **Arrangement and Supply** - If Tenant purchases utility service from the utility company, then before the Possession Date, Tenant shall arrange with the utility company serving the Premises to provide utility service in Tenant's name and to bill Tenant directly, and Tenant shall pay any deposits required. Tenant's obligations under this Lease are not affected by any failure or delay in utility supply, installation, or repair service.

§7.4. **Landlord's Right to Discontinue Utilities** - If Tenant defaults under this Lease, Landlord may discontinue any utility and services that Landlord supplies to Tenant, without notice or liability to Tenant, including water, gas, electricity, sewer, heating, and air-conditioning.

§8. CONDUCT OF BUSINESS BY TENANT

§8.1. **Use; Trade Name** - Tenant shall use the Premises to conduct only Tenant's Business (see 1.1(i)). Tenant shall not use more than 15% of the floor area of the Premises for storage and office space, and Tenant shall use the storage and office space solely for Tenant's Business. Tenant shall operate its business only under Tenant's Name (see 1.1(j)).

§8.2. **Opening and Continuous Use** - Tenant shall open Tenant's Business in the Premises with the public on the Rent Commencement Date. After the Rent Commencement Date, Tenant shall continuously operate Tenant's Business under Tenant's Name in the entire Premises during each hour of the Lease Term when Tenant is required to be open for business under §8.3, fully staffed, stocked, and fixtured.

For each day that Tenant fails to comply with this §8.2, Tenant shall pay 150% of the Minimum Annual Rent (prorated on a daily basis), such sum representing the parties' estimation of the damages that Landlord will suffer by Tenant's noncompliance.

§8.3. **Conduct of Business** - ~~Tenant shall conduct its business to maximize Gross Sales in the Premises.~~ Tenant shall open its store from 10:00 a.m. to 9:00 p.m. Monday through Friday, and from 10:00 a.m. to 6:00 p.m. on Saturday. Tenant shall light the show windows of the Premises and all its signs each night of the year until 10:00 p.m.

The arrangement, style, color and general appearance of all fixtures, advertising, and merchandise displays in the Premises are subject to Landlord's approval, both as to the manner of maintenance and as to the size, color, manner and existence of such materials. Tenant shall keep all such merchandise displays, fixtures, and advertising in first-class condition. Notwithstanding the foregoing, Landlord agrees to be reasonable in its approval of Tenant's fixtures, advertising and merchandise displays in the Premises, provided same: (i) are high quality and professionally produced, (ii) do not deviate from the aesthetics or moralistic values of the Center.

§8.4. **Operation by Tenant** - Tenant shall not place any merchandise, vending machines or other articles in any vestibule or entry of the Premises or outside the Premises; shall collect garbage, trash, rubbish and other refuse from in and about the Premises at least once a day (or more often if necessary), shall keep it in rat-proof containers inside the Premises, and shall remove it from the Premises to the dumpster serving the Premises at least once a week (or more often if necessary); shall not allow any sound system in the Premises to be audible outside the Premises; shall keep all mechanical equipment free of vibration and noise; shall not commit or permit any waste or nuisance in the Premises; shall not allow any coin-operated amusement devices, games or hand-lettered signs in the Premises; shall not permit delivery vehicles to load, unload, park or stand in any service drive or sidewalk; shall comply with all

laws, recommendations, ordinances, rules, regulations and other requirements of governmental and quasi-governmental authorities and of insurers at the Center; shall not allow any noxious, toxic or corrosive substance in the Premises; shall not place any load on the floor that exceeds the load that floor was designed to carry; and shall not install any equipment that can exceed the capacity of any utility facilities.

~~§8.6. Competing Operations - Tenant agrees that any business within 1~~ mile of the Center that Tenant operates or manages, directly or ~~indirectly~~ (or in which it has any other interest) and that competes with ~~Tenant's~~ Business decreases Percentage Rent under this Lease (~~which is~~ a major consideration for this Lease and the construction of the ~~Center~~). Accordingly, Tenant shall include 50% of the sales of ~~the other~~ business in Gross Sales under this Lease. Landlord may ~~inspect~~ the Gross Sales records of the other business to the same extent as ~~under~~ §4.2, and Tenant shall furnish to Landlord reports of gross sales ~~of the other business in the same manner as under §4.2.~~

§8.6. **Dignified Use** - Tenant shall not allow the Premises to be used for a public or private auction or any fire, "going out of business," bankruptcy, or similar sale, or for the sale, rental, or display of obscene material (such as nude photos, sexual devices, objects depicting any parts of the body which people do not normally expose to public view, and any similar items commonly associated with a peep show, massage parlor, adult book store, head shop, or similar business. In addition, Tenant shall not allow the Premises to be used in any other disreputable or immoral manner and shall allow them to be used only in a dignified and ethical manner consistent with the businesses in the rest of the Center.

~~§8.7. Merchants' Association - During the Lease Term, Tenant shall be a~~ member of a merchants' association in which Landlord and other tenants in the Center are members. Tenant shall pay annual dues according to the ~~rules~~ of the association as set by Landlord. Tenant's failure to pay dues is a default under this Lease, but does not terminate its membership unless Landlord terminates the Lease. The failure of any other tenant to pay dues to or join this association does not affect Tenant's obligations under this Lease. Tenant shall advertise in at least 4 merchants' association advertising programs a year, which may include newspaper advertisements, tabloids, and coupon books. In each program, Tenant shall take the same amount of space as allocated to the other members. Tenant also shall participate in all sales and promotions sponsored by the association. Tenant shall include the name of the Center and the address of the Premises in all advertisements, stationery or printed material in which Tenant mentions any ~~of its locations.~~ * (See page 11-a)

§8.8. **Center Promotions** - ~~If the Center has a grand opening,~~ Tenant shall contribute ~~$250.00 to defray~~ grand opening expenses. ~~In addition, Tenant shall contribute at least $100.00 a year for holiday decorations.~~ a one-time contribution of $1,000 toward Landlord's

§8.9. **Signs, Advertising** - Tenant shall not place anything on any exterior door or window of the Premises or on the inside of the Premises if visible from the outside, including signs, decals, advertising, and decorations, that does not comply with the Sign Criteria in Exhibit D or that reflects poorly on the Center or reflects poor taste, in Landlord's sole opinion. ** (see page 11a)

§8.10. **Environmental Compliance** - As part of its obligation to comply with laws and other requirements under §8.4, Tenant shall comply with all federal, state, and local environmental laws and regulations, such as the Clean Air Act, the Federal Water Pollution Control Act, the Resource Conservation and Recovery Act, the Superfund Law, and the Toxic Substances Control Act. Tenant shall send Landlord copies of any reports or other filings required by environmental laws and regulations. Tenant shall notify Landlord immediately if Tenant is notified of any potential violation of environmental laws and regulations at the Center. If Tenant becomes obligated under environmental laws and regulations to take any remedial action at the Center, Tenant may not take the action without obtaining Landlord's prior approval.

§9. TENANT'S PROPERTY

§9.1. **Alterations** - Tenant shall not make any alterations, additions or other changes (including painting, decorating and installing signs) to the

* **§ 8.7 Promotional Fund** - In the event, Landlord operates a Promotional Fund (the "Fund") for the purpose of advertising and promoting the Center, Tenant shall become a member of the Fund. The Fund shall be used by Landlord to pay costs and expenses associated with the formulation and carrying out of an ongoing program for the promotion of the Center, which program may include, without limitation, special events, shows, displays, signs, marquees, decor, seasonal events, and print, television, radio and other media advertisements. In addition, the Landlord may use contributions to the Fund to defray the costs of administration of the Fund, not to exceed fifteen percent (15%) of all contributions to the Fund. Tenant shall pay annual dues to the Fund in the amount of Six Hundred Dollars ($600.00), payable in equal monthly installments of Fifty Dollars ($50.00). Tenant's failure to pay dues is a default under this Lease. The failure of any other tenant to pay dues to the Fund does not affect Tenant's obligations under this Lease. Tenant shall advertise in at least four (4) advertising programs a year sponsored by the Fund, which may include newspaper advertisements, tabloids and coupon books. In each program, Tenant shall take the same amount of space as allocated to the other tenants of the Center.

** On or before Tenant's execution of this Lease, Tenant shall submit to Landlord for approval Tenant's plans for exterior signage, prepared in conformance with Exhibit D. Tenant's exterior sign shall be installed by Tenant at its expense within thirty (30) days after the Rent Commencement Date. Subject to delays as sited in Section 1.1.d. hereinabove, failure to comply with this Section 8.9 shall, without the necessity of notice from Landlord, constitute a default under this Lease, and Landlord shall be permitted to exercise its remedies as set forth in Section 15.2 hereof.

Premises. Tenant shall promptly remove any alteration, addition, or other change made without Landlord's prior approval or take any other action as Landlord directs.

§9.2. **Removal** - During the Lease Term, Tenant may not remove its personal property (such as equipment and trade fixtures), unless Tenant replaces it with property at least as valuable, and may not remove any property attached to the Premises (such as leasehold improvements, alterations, and additions). At the end of the Lease Term, Tenant shall remove all improvements, alterations, and additions as required by Landlord and, unless Tenant is in default, Tenant also shall remove all of its personal property (such as equipment and trade fixtures). In each case, Tenant shall repair any damage connected with the removal. If Tenant may remove its personal property at the end of the Lease Term, but fails to, Landlord may either remove it (and repair the removal damage) at Tenant's expense or may allow it to remain in the Premises, in which event it becomes Landlord's property. If Tenant defaults, Landlord may take exclusive possession of Tenant's personal property in the Premises and may use it until all defaults are cured, or Landlord may require Tenant to remove its personal property immediately.

§9.3. **Liens** - Tenant shall not allow any lien to attach to the Center or the Premises. For any lien connected with Tenant that attaches or is threatened, Landlord may require Tenant to bond it off or to furnish other indemnity satisfactory to Landlord within ~~7~~ days after the attachment or threat. 5
If Tenant fails to act as requested by Landlord, Landlord may take any necessary measures to protect it, and Tenant shall reimburse Landlord for its costs and expenses, plus a 15% administrative fee.

§9.4. **Tenant's Taxes** - Tenant shall pay when due all municipal, county, federal, or state taxes against its leasehold interest or its personal property at the Premises.

§9.5. **Lien on Tenant's Assets** - ~~To secure the performance of Tenant's~~ obligations under this Lease, Tenant grants to Landlord a security interest in all of Tenant's equipment, furniture, furnishings, appliances, goods, trade fixtures, inventory, chattels and personal property at the Premises, including after-acquired property, replacements and proceeds. Tenant shall sign any documents to evidence or perfect Landlord's security interest, such as financing statements or additional security agreements, and shall pay all costs and fees to file such documents. Landlord has all the rights and remedies of a secured party under the Uniform Commercial Code of the state where the Center is located. Landlord's security interest is subordinate to the lien or security interest of any vendor or lessor of goods or fixtures on the Premises and of any lender taking or succeeding to a purchase money security interest on such goods or fixtures. At Tenant's request, if no default exists under this Lease, Landlord shall sign an instrument effecting or confirming such subordination. The security interest and lien in this §9.5 are in addition to any landlord's lien provided by the law of the ~~state in which the Center is located.~~

§10. INSURANCE

§10.1. By Landlord

§10.1.1. **Property Insurance** - Landlord shall carry all-risk type property insurance on a replacement cost basis (with any endorsements deemed advisable by Landlord, such as rental loss) that covers the Premises. Unless Landlord self-insures under §10.7, Landlord waives any right of recovery against Tenant and its agents and employees for a loss covered by the property insurance required under this section, whether or not Landlord actually carries the required insurance, and whether or not Landlord does anything to invalidate the coverage under the terms of the policy.

§10.1.2. **Liability Insurance** - Landlord shall carry broad form commercial general liability insurance on the Common Areas providing coverage of not less than $1,000,000.00 per occurrence for bodily injury and property damage, combined single limit.

§10.2. By Tenant

§10.2.1. Property Insurance - Tenant shall carry all-risk type property insurance on a replacement cost basis that covers the plate glass in the Premises, the leasehold improvements installed by Tenant as a part of Tenant's Work or installed as additions or alterations, and Tenant's personal property in the Premises, including its merchandise, trade fixtures, equipment, furnishings, such as wall covering, floor covering, carpeting, and drapes. Tenant shall also carry insurance that covers vandalism, malicious mischief, and actual and attempted robbery, burglary, and safe burglary and that covers business interruption and rental continuation. Tenant's property insurance must provide coverage beginning on the Possession Date. Tenant waives any right of recovery against Landlord and its agents and employees for a loss covered by the property insurance required under this section, whether or not Tenant actually carries the required insurance, and whether or not Tenant does anything to invalidate the coverage under the terms of the policy.

§10.2.2. Liability Insurance - Tenant shall carry broad form commercial general liability insurance on the Premises naming Landlord as an additional insured, providing coverage of not less than $1,000,000.00 per occurrence for bodily injury and property damage, combined single limit, and including fire/legal liability coverage, and including contractual liability coverage that recognizes this Lease. ~~The~~ limit of the liability policy does not limit or diminish Tenant's liability under this Lease, Tenant may obtain a policy with a higher limit, and Landlord may increase the limit at any time it deems necessary for adequate protection.

Subject to the sovereign immunity of Montgomery County, Maryland, as Tenant, the

§10.3. Miscellaneous Insurance Requirements - ~~Tenant shall obtain Landlord's prior approval of Tenant's insurance companies and their policy forms.~~ Each of Tenant's policies must obligate the insurer to notify Landlord (with a copy of the notice to Landlord's Director of Risk Management) in writing at least 30 days before cancellation or modification of such insurance and must provide that the inclusion of additional insureds does not preclude the right of protection under the policy by the named insured for claims made against it by additional insureds where such claims would have been recoverable under the policy had the additional insureds not been covered by the policy. Tenant shall provide Landlord with copies of the policies or with certificates that evidence that such insurance is in full force and that state the terms of the policy. If Tenant fails to provide copies of the policies or certificates within 10 days after Landlord's request, of if Tenant fails to carry the required insurance, Landlord may obtain the insurance for Tenant, and Tenant shall pay the cost of the insurance, plus a 15% administrative fee, to Landlord on demand.

§10.4. Tenant's Waiver - Except in the event of Landlord's negligence, Tenant waives any right to recover against Landlord, its agents, and employees, for damage to person or property, including consequential damages, and including damage connected with: (a) ~~Landlord's not maintaining any part of the Center;~~ (b) wind, water, or other natural element; (c) failure to supply any utility service and failure of any utility facilities or systems, including HVA/C, electric wiring, and plumbing; (d) broken glass; (e) blockage of sewer pipes or downspouts; (g) bursting, leaking or running over of any vessel or pipe, such as a toilet or waste pipe; (h) the escape of steam or hot water; (i) water, snow or ice; (j) the falling of any fixture, plaster or stucco; ~~(k)~~ (l) damage, theft, or loss of property of Tenant or others by third parties; ~~(l)~~ (m) the negligence of third parties, including Tenant's customers, other tenants in the Center, and occupants of nearby properties; ~~(m) and, if the damage is covered by insurance that Tenant is required to carry under this Lease or by any other insurance that Tenant carries, the negligence of Landlord.~~ (n)

(k) noise and vibration caused by above-ground or below ground trains or subways:

§10.5. Policy Requirements - Tenant shall not allow anything to be done in or about the Premises that violates Landlord's insurance policies or prevents Landlord from obtaining a policy in amounts and with companies selected by Landlord. If Tenant allows anything to be done that increases the premium for Landlord's insurance, Tenant shall pay the amount of the increase to Landlord on demand, and Landlord may correct any such condition at Tenant's expense. If Tenant's Business includes food preparation or the use, sale or storage of flammable materials, Tenant shall install chemical extinguishing devices approved by the appropriate insurance rating organization and Landlord's property insurer and shall keep such devices under service as required by such organization. If gas is used in the Premises, Tenant shall install manual and automatic gas cut-off devices.

* Provided the Tenant is Montgomery County, Maryland (Department of Facilities and Services), Tenant may be a self-insurer against losses otherwise covered by all-risk type property insurance pursuant to Section 10.2.1 of this Lease.

§10.6. **Indemnification** - Tenant shall indemnify Landlord against all liens, claims, damages, and losses (including court costs and reasonable attorneys' fees) connected with Tenant's control, use, or possession of the Premises or Tenant's operations in the Center, except those claims, damages or losses caused by negligence of Landlord its contractors, agents or employees.

§10.7. **Self-Insurance** - Landlord may self-insure against any of the risks for which it would otherwise be required to carry insurance as long as Landlord (including any affiliates) has a net worth of at least $50,000,000.

* (See page 14-a)

§11. ESTOPPEL CERTIFICATE, ATTORNMENT, SUBORDINATION

§11.1. **Estoppel Certificate** - Tenant shall sign and deliver to any person designated by Landlord recordable certificates that (a) ratify this Lease; (b) state the Possession and Rent Commencement Dates and the date the Lease Term expires; and (c) state that this Lease is in full force and has not been assigned or amended (except as stated); (d) state that all conditions under this Lease to be performed by Landlord have been satisfied (stating exceptions, if any); (e) state that neither Tenant nor Landlord is in default under this Lease or have failed to perform their obligations under this Lease (or stating the default or the failure); (f) state that no defenses or offsets against the enforcement of this Lease by Landlord exist (or, if any, stating those claimed), (g) state the advance rent, if any, paid by Tenant; (h) state the date to which rent has been paid, (i) state the amount of any security deposited with Landlord, and (j) contain such other information as Landlord reasonably requires. The certificate binds Tenant, and anyone who receives a certificate may rely on it.

§11.2. **Attornment** - If Landlord transfers any of its interest in any of this Lease or the Center (including assignment of this Lease to a mortgagee as security and any subsequent transfer by foreclosure sale), Tenant shall attorn to the transferee (or, in the case of conditional assignments, shall agree to attorn to the assignee if the condition occurs) and shall recognize the transferee as Landlord under this Lease. At Landlord's request, Tenant shall sign an attornment agreement in the form required by Landlord. If Landlord transfers its entire interest in this Lease, its liability under this Lease terminates on the date of the transfer ~~(including liability for any Security Deposit transferred to the transferee Landlord)~~. Such transferee agrees to recognize Landlord's and Tenant's rights and obligations under this Lease.

§11.3. **Subordination** - This Lease is subject to all matters of record at the Lease Commencement Date and to any interests in the Center created during the Lease Term and is subject to any leases under which Landlord holds possession at the date of this Lease and at any other time during the Lease Term. Tenant may not violate the restrictions and conditions in any matter of record at the Lease Commencement Date. Unless requested otherwise by a lender as to its lien, this Lease is also subject to the liens connected with any method of financing, whether created before or during the Lease Term, against all or part of the Center, and to all renewals, modifications, replacements, consolidations and extensions of the liens. The subordination in this section is self-operative so that no other documents are necessary to subordinate Tenant's interest under this Lease. However, Tenant shall sign any document requested by Landlord, a lender, or other interest owner to further evidence the subordination.

§11.4. **Signing Deadline** - Tenant shall sign and deliver documents under this §11 within 10 days after Tenant receives the documents.

§12. ASSIGNMENT AND SUBLETTING

Tenant may not assign this Lease or sublet the Premises without Landlord's prior written consent, which consent may be withheld in Landlord's sole and absolute subjective discretion. Landlord's consent to any assignment or subletting does not constitute consent to any subsequent assignment or subletting. If this Lease is assigned or the Premises are sublet, Landlord may collect rent from the assignee or subtenant and apply it to the rent due under this Lease. No assignment or subletting without Landlord's consent and no collection of rent (a) waives Landlord's right to enforce this section, (b) constitutes Landlord's acceptance of the assignee or subtenant, or (c) releases Tenant from its obligations under this Lease. Even if Landlord consents to an assignment, Tenant remains fully liable under this Lease after the assignment.

"Assign," "sublet," "assignment," and "subletting" mean any sale, assignment, mortgage, pledge and any other transfer of this Lease or any interest in this Lease; any sublet of all or any part of the Premises; any license, concession, and lease of departments in the Premises; any occupancy by anybody other than Tenant; and any change of control of Tenant (such as the appointment of an attorney-in-fact for Tenant, or the sale, issuance, or retirement of stock in a corporate Tenant or of partnership interests in a partnership Tenant or of beneficial interests in a trust Tenant).

* (See page 15-a)

§13. CASUALTY DAMAGE

§13.1. Rebuilding by Landlord - Except if this Lease is terminated under §13.3, if the Premises are damaged by casualty, Landlord shall promptly repair the damage to put the Premises in the same condition as before the casualty (excluding Tenant's leasehold improvements installed by Tenant as a part of Tenant's Work or installed as additions or alterations, and excluding Tenant's merchandise, trade fixtures, furnishings, and equipment). However, Landlord is not required to spend more for rebuilding the Premises than that part of the insurance proceeds received by Landlord that is attributable to the Premises, less that part of all expenses, costs, legal fees and court costs incurred by Landlord in connection with such award and that are attributable to that part of the award.

§13.2. Rebuilding by Tenant - Except if this Lease is terminated under §13.3, if any of Tenant's leasehold improvements installed by Tenant as a part of Tenant's Work or installed as additions or alterations, or any of Tenant's merchandise, trade fixtures, furnishings, and equipment are damaged by casualty, Tenant shall promptly replace it with items as nearly the same as reasonably possible within 30 days after Landlord substantially completes its rebuilding work. Tenant may close Tenant's Business during the rebuilding only with Landlord's approval, and if Tenant has so closed, it shall reopen for business by the 30th day after Landlord substantially completes its rebuilding work.

, or as soon as is reasonably possible,

§13.3. Landlord's Termination Right - If the Premises are damaged by casualty and the cost to restore the Premises exceeds 50% of the cost to rebuild the entire Premises, then Landlord may terminate this Lease effective as of the date of the casualty by notifying Tenant within 60 days after the casualty.

§13.4. Proportionate Rent Adjustment - If the Premises are damaged by casualty, Minimum Annual Rent, ~~Base Sales,~~ and other charges payable by Tenant adjust in proportion to the part of the Premises that Tenant cannot occupy because of the damage or the rebuilding work.

§14. CONDEMNATION

** (See page 15-a)

~~§14.1. Definitions - "Condemnation" means a taking by exercise of the~~ power of eminent domain and any conveyance in lieu of such a ~~taking,~~ whether permanent or temporary (if more than 6 months), ~~by any public~~ or quasi-public authority in appropriate proceedings, and ~~includes~~ any governmental action preventing or substantially ~~restricting~~ use of the Premises for permitted activities or of the Common Areas for access and parking for more than 6 consecutive ~~months.~~ The "date of condemnation" is the date the condemning ~~authority takes possession of the condemned area.~~

§14.2. Extent/Termination - If 10% or more of the Premises is condemned, or 15% or more of the Center or of the parking spaces in the Common Areas is condemned, then Landlord may terminate this Lease by notice to Tenant within 90 days after the date of condemnation.

§14.3. Rebuilding - If less than 10% of the Premises or less than 15% of the Center or of the parking spaces in the Common Areas are condemned, or if Landlord does not terminate this Lease under §14.2, then Landlord shall promptly rebuild the Premises and the Center on the land remaining to a complete unit of a quality and character as close as practical to that which existed before the condemnation (excluding Tenant's merchandise, trade fixtures, furnishings, and equipment). Tenant shall promptly replace its merchandise, trade fixtures, furnishings, and equipment in the Premises within 30 days after Landlord

, or as soon as is reasonably possible,

* Landlord's Share of Profit. In the event of any sublease of all or any portion of the Premises, or assignment of all or any portion of the Premises, where the rent reserved in the sublet or assignment exceeds the rent or pro rata portion of the rent, as the case may be, for such space reserved in the Lease, or where Tenant receives a lump sum of money for the sublease or assignment of the leasehold, Tenant shall pay to Landlord monthly, as additional rent, at the same time as the monthly installments of Minimum Rent hereunder, one-half (1/2) of the excess of the rent reserved in the sublease or assignment over the rent reserved in this Lease applicable to the subleased or assigned space, or, in the event Tenant receives a lump sum payment of money for the assignment of the leasehold or sublease, Tenant shall pay to Landlord one-half (1/2) of such lump sum within five (5) days after Tenant's receipt of such sum.

** **§14.1. Definitions -** "Condemnation" means a taking by exercise of the power of eminent domain and any conveyance in lieu of such a taking, whether permanent or temporary (if more than 6 months), by any public or quasi-public authority in appropriate proceedings, and includes any governmental action preventing or substantially restricting use of the Premises for permitted activities or of the Common Areas for access and parking for more than 6 consecutive months. Notwithstanding the foregoing, the termination of Landlord's possessory rights to the land leased from the State Highway Administration and the taking by exercise of the power of eminent domain or any conveyance in lieu of such a taking of those areas shown generally on Exhibit G as "Future Dedication" shall not constitute a condemnation, the provisions of this §14 shall not be applicable thereto, and Tenant shall have no rights in the event thereof. The "date of condemnation" is the date the condemning authority takes possession of the condemned area.

substantially completes its rebuilding work. Tenant also shall rebuild Tenant's Work within the same time period if that part of the condemnation award received by Landlord that is attributable to the Premises is not sufficient for Landlord to rebuild the Premises. Tenant may close Tenant's Business during the rebuilding only with Landlord's approval, and if Tenant has so closed, it shall reopen for business by the 30th day after Landlord substantially completes its rebuilding work. However, Landlord is not required to spend more on the rebuilding than that part of the condemnation award received by Landlord that is attributable to the area to be rebuilt, less that part of all expenses, costs, legal fees and court costs incurred by Landlord in connection with such award and that are attributable to that part of the award.

, or as soon as is reasonably possible,

§14.4. Effect on Rent - If Landlord terminates this Lease under §14.2, rent abates as of the date of termination. Landlord shall refund to Tenant that part of any rent paid in advance for a period after the condemnation. If Landlord does not terminate this Lease under §14.2, Minimum Annual Rent, Base Sales, and other charges adjust to reflect the nature and extent of the condemnation of the Premises, both during the rebuilding and after the rebuilding has been completed.

§14.5. Award - Landlord may receive all of any award for the condemnation of the Premises or the Center, including any part of the award for the leasehold, reversion, and fee. However, Tenant may make a separate claim against the condemning authority for Tenant's cost to move its merchandise, furniture, fixtures, leasehold improvements and equipment.

§15. TENANT'S DEFAULT

§15.1. Default Defined - Tenant "defaults" under this Lease if:

a. Tenant fails to pay any rent or any other charges when due from Tenant under this Lease; except that for the first 2 late payments during the Lease Term, Tenant defaults only if it fails to make the payment within 10 days after the payment is due; or

b. Tenant submits a report, statement, certificate, or other document to Landlord that is false or misleading, as determined by Landlord; or

c. Tenant fails to conduct Tenant's Business in the Premises as required by §8; or

d. possession of any of the Premises is held by any person other than as permitted under this Lease; or

e. Tenant commences any proceeding for reorganization, adjustment, liquidation, dissolution, composition, or arrangement of it or its debts under any law providing relief for debtors, such as bankruptcy or insolvency; or assigns any of its assets for the benefit of creditors; or applies for the appointment of a receiver, guardian, conservator, trustee, or other similar officer to take charge of a substantial part of its business; or otherwise makes arrangements under any present or future law to provide a plan for it to settle, satisfy, or extend the time for the payment of its debts; or generally does not pay its debts as they become due or admits in writing its inability to pay its debts; or takes any corporate action to authorize any of the actions in this §15.1(e); or

f. Tenant is adjudicated bankrupt or insolvent, and if the adjudication is not reversed within 60 days thereafter; or a receiver, guardian, conservator, trustee, or other similar officer is appointed to take charge of a substantial part of Tenant's business, and if the appointment is not voided within 60 days thereafter; or a proceeding for reorganization, adjustment, liquidation, dissolution, composition, or arrangement of it or its debts under any law providing relief for debtors, such as bankruptcy or insolvency, is commenced against Tenant, and if the proceeding is not dismissed within 60 days thereafter; or Tenant is required to otherwise make arrangements under any present or future law to provide a plan for it to settle, satisfy, or extend the time for the payment of its debts; or any execution or attachment is issued against Tenant, its interest in this Lease, or any of Tenant's property, and in connection with the execution or attachment the Premises may be taken or occupied or attempted

to be taken or occupied by someone other than Tenant, and if the execution or attachment is not voided within 60 days thereafter; or

g. any action occurs by or on behalf of, or against, or regarding the property or affairs of Tenant's guarantor (if any) of this Lease, that would constitute a default by Tenant if taken by, against or with respect to Tenant, its property or affairs; or

h. Tenant fails to perform or observe any of its other obligations under this Lease within 20 days after notice from Landlord to Tenant specifying the failure, or if the failure cannot be cured by due diligence within that day period, Tenant fails to commence curing within the 20 day period or to continue curing the failure with due diligence after that period.

§15.2. Landlord's Remedies - If Tenant defaults, Landlord may treat the default as a breach of this Lease, and in addition to any and all other rights or remedies of Landlord in this Lease or at law or in equity, Landlord may do any or all of the following, without further notice or demand to Tenant or any other person:

§15.2.1. Termination - Landlord may declare the Lease Term ended (even after it has relet the Premises without terminating this Lease) and may re-enter and retake possession of the Premises and remove all persons and property from the Premises. If Landlord terminates this Lease under this §15.2.1, Tenant shall pay to Landlord, in addition to any other amounts Tenant is obligated to pay to Landlord under this Lease:

a. any unpaid rent, including interest, that is due when this Lease is terminated; plus

b. that rent, including interest, that would have been earned after termination until the time of judgment; plus

~~c. the present value (using a discount rate of 5%) of the excess, if any, of~~ the total rent and charges under this Lease for the remainder of the Lease Term over the then reasonable rental value of the Premises for the remainder of the Lease Term. The total rent payable by Tenant for each Lease Year after default ~~equals~~ the average Minimum Annual and Percentage Rents that Tenant ~~was~~ obligated to pay from the Rent Commencement Date to the time of default or during the 2 full Lease Years before default, ~~whichever period is shorter; plus~~

d. any other amount necessary to compensate Landlord for its damages connected with Tenant's failure to perform its obligations under this Lease, such as costs to re-enter and retake possession of the Premises and remove all persons and property from the Premises, to alter, repair, and decorate the Premises, and reasonable attorneys' fees, brokerage commissions, advertising, and other reletting costs; plus

e. such other amounts, in addition to or in lieu of the foregoing, as may be permitted from time to time by applicable law.

Nothing in this Lease limits Landlord's right to recover as damages in any bankruptcy, insolvency, receivership, reorganization or arrangement proceeding the maximum allowed by the law then governing such proceedings, even if that amount is greater than the amount Landlord may recover under this Lease. In addition, if Tenant seeks protection from creditors under the Federal Bankruptcy Act, or if any petition is filed under that Act to adjudicate Tenant as bankrupt, Landlord is entitled to the rights under §365(b)(3) of the Act (as amended) regarding a lease of real property in a shopping center.

§15.2.2. Rent Suit without Re-entry/Termination - Landlord may sue to collect rent (as it accrues under this Lease) and damages (including reasonable attorneys' fees ~~and the cost to renovate the Premises~~) without retaking possession of the Premises or terminating this Lease.

§15.2.3. Re-entry without Termination - Landlord may re-enter and retake possession of the Premises from Tenant by summary proceedings or otherwise and remove Tenant and any other occupants from the Premises in such manner as Landlord deems advisable with ~~or without~~ legal process and using

self-help if necessary. Landlord also may remove from the Premises all or any of the personal property in the Premises and may place it in storage at a public warehouse at the expense and risk of the owner or owners thereof. "Re-enter" or "re-entry" as used in this Lease are not restricted to their technical meaning but are used in their broadest sense. Neither Landlord's commencement and prosecution of any action in unlawful detainer, ejectment or otherwise, nor Landlord's execution of any judgment or decree obtained in any action to recover possession of the Premises, nor any other re-entry and removal, terminates this Lease (even if the re-entry is done under summary proceedings or otherwise) or discharges Tenant from any obligation under this Lease. In any of such events, Tenant continues to be liable to pay rent and to perform all of its other obligations under this Lease, and Tenant shall pay to Landlord all monthly deficits in rent, after any such re-entry, in monthly installments as the amounts of such deficits from time to time are ascertained. If Landlord retakes possession, Landlord may relet parts or all of the Premises for terms greater or less than or equal to the unexpired part of the Lease Term on such terms and conditions and for such rent as the Landlord deems proper. Landlord shall apply the rent from such reletting (if and when received): first, to pay any indebtedness other than rent due under this Lease from Tenant to Landlord; second, to pay any cost to relet (including costs to alter, repair or decorate the Premises as Landlord deems advisable); third, to pay rent due and unpaid under this Lease; and the residue, if any, to be held by Landlord and applied to pay future rent as it becomes due. If the rent received from reletting, after being applied as required in this §15.2.3, is not enough to pay the rent under this Lease, then Tenant shall pay such deficiency to Landlord each month. Tenant has no right to any excess. Tenant also shall pay to Landlord, as soon as ascertained, any costs to relet, alter, and repair not covered by the rent received from reletting, including brokerage commissions and reasonable attorneys' fees. Nothing in this Lease obligates Landlord to relet all or any part of the Premises.

§15.3. Waiver of Rights of Redemption - To the extent permitted by law, Tenant waives all rights of redemption under any present or future laws.

§15.4. No Counterclaim - Tenant may not interpose any counterclaim in any proceedings Landlord brings against Tenant for its default under this Lease, but Tenant may assert such claims in a separate action brought by Tenant.

§15.5. Landlord's Right to Recover Fees & Expenses - If Tenant defaults under this Lease and Landlord files suit to enforce its rights, Tenant shall pay Landlord's costs and expenses connected with the suit (including reasonable attorneys' fees and court costs), even if Tenant pays rent after the suit is filed, but before judgment is rendered.

* (See page 18-a)

§15.6. Waiver of Trial by Jury - Landlord and Tenant waives trial by jury in any action, proceeding or counterclaim brought by ~~Landlord~~ one party against ~~Tenant~~ the other in connection with this Lease or the Premises.

§15.7. Cure Right - Without waiving any claim for damages, Landlord may cure Tenant's default at Tenant's expense (including a 15% administrative fee), and, in an emergency, Landlord may also cure a failure that has not ripened into a default after only oral notice has been attempted and an opportunity for Tenant to cure has been given.

§16. DEFAULT BY LANDLORD

§16.1. Landlord's Defaults - Landlord defaults under this Lease if it fails to cure a breach of Tenant's covenant of quiet enjoyment (see §2.1) within 30 days (or such additional time as is reasonably required to correct any such default) after written notice to Landlord by Tenant, specifically describing such failure. Landlord's failure to maintain or to repair under §6.1 breaches Tenant's covenant of quiet enjoyment if the failure constitutes a constructive eviction.

** (See page 18-a)

§16.2. Notice to Mortgagee - If the holder of a mortgage or other lien against the Center or this Lease gives written notice of its address to Tenant, Tenant shall send the holder a copy of any default notice given to Landlord. If Landlord defaults under this Lease, Tenant shall notify the holder in writing of the default, and the holder may (but is not obligated to) cure the default within a reasonable period before Tenant may exercise any of its rights by reason of Landlord's default.

* Prevailing Party. Notwithstanding the foregoing, in the event of a claim for loss or damages under this Lease by Landlord or Tenant, the prevailing party in any such action shall be reimbursed by the losing party for all reasonable costs (including reasonable attorney's fees) in connection with any such action.

** Landlord's Defaults. Notwithstanding the foregoing, Landlord's, or its assign's, failure to do, observe, keep and perform any of the terms, covenants, agreements or provisions of this Lease required to be done, observed, kept or performed by Landlord, or its assigns, for a period greater than thirty (30) days after written notice by Tenant to Landlord of said failure (except if the nature of Landlord's obligation is such that more than thirty (30) days are reasonably required for its performance, then Landlord shall not be deemed in default if it commences performance within the thirty (30) day period and thereafter diligently pursues the cure to completion), shall be deemed a default by Landlord; and, Tenant may, with prior notice, pursue its rights and remedies provided at law or in equity or elsewhere herein. This paragraph set forth on this page 18-a shall apply only while the Tenant under this Lease is Montgomery County, Maryland.

, except that, where possible, Landlord and its agents shall exercise care upon entering the Premises and shall, if possible, secure the Premises upon the conclusion of the emergency.

§17. MISCELLANEOUS

§17.1. Access by Landlord - Landlord and its agents may enter and examine the Premises at reasonable times and may also enter the Premises to show them to prospective purchasers and other persons. During the last 6 months of the Lease Term, Landlord may maintain in and on the Premises notices deemed advisable by Landlord. Landlord and its agents may enter the Premises to maintain, repair, and replace as Landlord deems necessary. Rent does not abate during any entry, and nothing in this §17.1 obligates Landlord to maintain, repair, or replace. In addition, during any apparent emergency, Landlord and its agents may enter the Premises forcibly with no liability for the entry and without affecting Tenant's obligations under this Lease. during business hours

* (See page 19-a)

§17.2. Successors - The terms "Landlord" and "Tenant" include the parties' respective heirs, successors, administrators, executors, legal representatives, and assigns. However, no rights benefit any heirs, successor, administrator, executor, legal representative, or assignee of Tenant unless the assignment is approved in advance by Landlord. In addition, no person or entity that constitutes Landlord has any personal liability under this Lease, and Tenant may look only to Landlord's interest in the Center if Landlord defaults under this Lease (but Tenant may enjoin Landlord from violating this Lease). If Tenant is more than one person, Tenant is bound jointly and severally by this Lease.

§17.3. Waiver - Landlord and Tenant may waive rights under this Lease only in writing. However, where this Lease provides time periods within which a party must notify the other party to exercise a right of the notifying party, the notifying party's failure to provide the notice within the time period waives that right in that instance. Landlord does not waive a default if it accepts rent or if it fails to exercise any of its remedies for a default. A waiver by Landlord or Tenant does not implicitly waive any other right under this Lease, nor does it implicitly waive the same right for past or future situations.

§17.4. Accord and Satisfaction - Landlord may accept any payment from or on behalf of Tenant and apply it to any obligation of Tenant. Landlord's acceptance of the payment satisfies only the obligation to which Landlord has applied the payment and only to the extent the payment is sufficient to satisfy that obligation. Landlord's acceptance of the payment does not prejudice Landlord's right to recover any and all other amounts owed by Tenant under this Lease and Landlord's right to pursue any other available remedy. Landlord may disregard any endorsement or statement on any check or letter concerning the purpose of any payment, and no endorsement or statement on any check or letter constitutes an accord and satisfaction unless otherwise agreed to in writing by Landlord and Tenant.

§17.5. Entire Agreement; Changes in Writing - There are no representations, warranties, agreements, or conditions between Landlord and Tenant except as set forth in this Lease. No change to this Lease binds Landlord or Tenant unless in writing and signed by the party to be charged.

§17.6. No Partnership - Landlord is not Tenant's partner, employer, principal, master, agent or joint venturer by reason of this Lease. and Tenant are

§17.7. Force Majeure - Landlord ~~is~~ excused from performing any act required under this Lease while it is delayed for a reason beyond its control, such as a strike, lockout, labor trouble, labor, material, or equipment shortage, governmental or quasi-governmental law or regulation, power failure, adverse weather, fire, riot, insurrection, or war. Financial inability shall not be deemed a reason for delay beyond a party's control.

§17.8. Submission of Lease - Submission of this Lease to Tenant does not constitute an offer to lease. This Lease becomes effective only when Landlord signs it and delivers it to Tenant. By signing this Lease and delivering it to Landlord, Tenant grants Landlord an irrevocable option to accept this Lease by signing it and sending it to Tenant within 60 days after Landlord receives it.

§17.9. Notices - All notices, consents, approvals and other communications required or permitted under this Lease must be written (except for emergencies, where oral notice is sufficient, if followed immediately by written notice) and must be sent to Landlord at its Notice Address (Landlord's address on page 1 of this Lease), with a copy to Giant Food Inc. at the same address, attention Law

* **§17.1.1. Right of Entry.**

§17.1.2. Excavation - If any construction, excavation or other building operation shall be about to be made or shall be made on any premises adjoining or above or below the Premises or on any other portion of the Center, Tenant shall permit Landlord, or the adjoining owner, and their respective agents, employees, licensees and contractors, to enter the Premises and to strengthen, add to or shore the foundations, walls, columns or supporting members thereof, and to erect scaffolding and/or protective barricades around and about the Premises (but not so as to preclude entry thereto) and to do any act or thing necessary for the safety or preservation of the Premises. Tenant's obligations under this Lease shall not be affected by any of the foregoing or any such construction or excavation work, shoring-up, scaffolding or barricading. Landlord shall not be liable in any such case for any inconvenience, disturbance, loss of business or any other annoyance arising from any such construction, excavation, shoring-up, scaffolding or barricades, but Landlord shall use its reasonable efforts so that such work will cause as little inconvenience, annoyance and disturbance to Tenant as possible, consistent with accepted construction practice in the vicinity, and so that such work shall be expeditiously completed.

Department, Dept. #593; and to Tenant at its Notice Address (Tenant's address on page 1 of this Lease).

All notices must be sent to the other party's Notice Address either by private delivery service (such as a local courier or Federal Express) with provision for acknowledgment of receipt by the recipient, or by certified mail (return receipt requested), postage prepaid. Notices sent as required by this Lease that are delivered to the other party's Notice Address during normal business hours are effective when delivered even though the other party fails to acknowledge receipt. Either party may notify the other of a new Notice Address at any time. Tenant shall send a copy of any notice of Landlord's default to any mortgagee under §16.2.

§17.10. Section Titles - This Lease must be construed without reference to section titles, which are inserted only for convenient reference.

§17.11. Number and Gender - The masculine, feminine, or neuter gender in this Lease means the correct gender applicable, and the singular includes the plural, and conversely, as the context requires.

§17.12. Broker's Commission - Each party represents that it has not dealt with any broker on this Lease. Each party shall indemnify the other against any losses, claims, and damages (including brokerage claims and reasonable attorneys' fees) arising from the falsity of its representation.

§17.13. Partial Invalidity - If any provision of this Lease or its application to any person or circumstance is invalid or unenforceable, the remainder of this Lease, or the provision's application to other persons or other circumstances, is not affected. Landlord and Tenant intend each provision of this Lease to be valid and enforceable to the fullest extent permitted by law.

§17.14. Recording - Tenant may not record this Lease or any memorandum or short form of this Lease in the public records. At Landlord's request, Tenant shall sign a recordable short form or memorandum of lease containing the terms required by statute and any other terms that Landlord wants to include, which Landlord may record at Landlord's expense.

§17.15. Applicable Law - Landlord and Tenant intend that this Lease be construed under the laws of the state in which the Premises are situated.

§17.16. Not Construed Against Drafter - Both parties have had full opportunity to negotiate the terms of this Lease, and neither party intends that this Lease be construed for or against either party because of that party's role in drafting this Lease.

§17.17. Mortgagee's Approval - If any lender requires changes to this Lease as a condition of making a loan for the Center, and if Tenant does not agree to the changes within 30 days after Landlord's request, then Landlord may terminate this Lease. However, Landlord may not terminate this Lease if Tenant does not agree to changes to the rent, to other charges, or to the term of this Lease. If this Lease is terminated under this §17.17, neither party has any further obligation to the other under this Lease nor has any liability to the other for the termination of the Lease.

§17.18. Include, Shall, May - "Include," "includes," and "including" mean considered as part of a larger group, and not limited to the items recited. "Shall" means "is obligated to"; "may" means "is permitted to, but is not obligated to."

~~**§17.19. Attorney-in-Fact** - By its failure to sign documents or do other~~ things required of Tenant under this Lease, Tenant ~~irrevocably appoints~~ Landlord as its duly authorized agent and ~~attorney-in-fact~~ (which is coupled with Landlord's ~~interest in the~~ Premises under this Lease) to sign the documents and ~~do the things on Tenant's behalf.~~

§17.20. Survival - All of Tenant's obligations under this Lease that have accrued, but have not been performed, survive the end of the Lease Term (or, an assignment of Tenant's interest, in the case of a Tenant assigning its interest and being released from liability with Landlord's approval), ~~including the security interest created by this Lease~~ if this Leaseterminates in connection with

Tenant's default. In addition, Tenant's obligation to indemnify Landlord under §10.6 survives the end of the Lease Term (or, an assignment of Tenant's interest) for Tenant's failure to comply with environmental laws and regulations under §8.10, even though Tenant's obligation to indemnify may not have accrued at the end of the Lease Term (or, at the assignment of Tenant's interest).

~~§17.21. Corporate Resolutions; Attorney's Opinion - If Tenant is a~~ corporation, it shall furnish to Landlord (when it signs this Lease) certified copies of a resolution of its Board of Directors authorizing Tenant to enter into this Lease in the form of the Tenant's Resolutions attached as Exhibit F. If Tenant's guarantor is a corporation, Tenant shall furnish to Landlord (when it signs this Lease) certified copies of a resolution of its guarantor's Board of Directors authorizing the guarantor to guarantee Tenant's obligations under this Lease in the form of the Guarantor's Resolutions attached as Exhibit F. Tenant also shall furnish to Landlord an opinion of counsel regarding Tenant's and its guarantor's corporate standing and their signing of this Lease and the Guaranty, ~~respectively (in the form of the Attorney's Opinion attached as Exhibit F).~~

§17.22. Cost of Performance - Except as provided otherwise in this Lease, the party obligated to perform an obligation is also obligated, as between Tenant and Landlord, to pay the cost of performance.

§17.23. No Implications - References in this Lease to any or all other parts of this Lease, such as "as provided otherwise in this Lease," or "as permitted by this Lease," or "as required in this §15.2.3," refer to the express terms of that part or of the entire Lease, and neither party intends to refer to any implied terms.

§17.24. Time of the Essence - Time is of the essence as to all matters in this Lease.

* (See pages 21-a and 21-b)

Executed as of the date first written above.

LANDLORD:

MONTROSE CROSSING, INC., BY:
GFS REALTY, INC., agent

ATTEST:

By: David B Sykes
Name: David B Sykes
Title: _____ Secretary

APPROVED BY
BSAI
FOR GFS
SIGNATURE

By: Stephen L. Oseroff
Name: Stephen L. Oseroff
Title: Vice President,
duly authorized

A. Corporate Tenant

ATTEST:

By: _____
Name: _____
Title: _____ Secretary

TENANT:

MONTGOMERY COUNTY, MARYLAND

By: _____
Name: Gordon Aoyagi
Title: ~~Asst~~ CAO President

APPROVED AS TO FORM AND LEGALITY

Office of the County Attorney

By: Ramona Bell-Pearson

RECOMMENDED:

By: Robert Baird
for REY JUNQUERA

* §17.25. Landlord's Consent. If, at any time during the Term of this Lease or any extension or renewal hereof, Tenant requests from Landlord: (i) Landlord's consent to a proposed name change; (ii) Landlord's consent to a modification of Tenant's signage; (iii) subordination of Landlord's rights to a lien on, or lease of, Tenant's trade fixtures; (iv) Landlord's consent to an assignment of this Lease or subletting of the Premises; or (v) any other compliance or consent which is separate from the initial leasing of the Premises, then, in any of such events, Tenant shall pay to Landlord as additional rent, within seven (7) days from the date of an invoice sent to Tenant, any and all reasonable costs (including attorneys' fees) incurred by Landlord with respect to any such request by Tenant. The foregoing shall not constitute consent by Landlord to any of such requests.

§17.26. Termination of Existing Lease.

Landlord and Tenant hereby agree that the certain Lease Agreement by and between B.F. SAUL REAL ESTATE INVESTMENT TRUST, predecessor-in-interest to Landlord, and Tenant, dated June 11, 1990 (the "Existing Lease"), shall automatically terminate and be of no further force and effect on the date Tenant surrenders to Landlord the premises leased under the Existing Lease (the "Existing Premises"), but in no event later than the thirtieth (30th) day after Tenant opens for business in the Premises. It is understood and agreed that all future rights and obligations under the Existing Lease shall cease on the Termination Date. Landlord and Tenant further agree that all obligations under the Existing Lease (which shall have either accrued by the Termination Date or the claim for which shall have arisen from an incident which occurred prior to the Termination Date) shall survive the termination of the Existing Lease.

Tenant hereby agrees to surrender to Landlord, on the Termination Date, the Existing Premises in broom-clean condition, and in accordance with all the other terms and conditions of the Existing Lease. In the event Tenant fails to surrender the Existing Premises to Landlord on the Termination Date, Tenant agrees it will be a holdover tenant at Landlord's sufferance. Tenant further agrees Landlord shall the right to injunctive relief, an action for damages, and any and all other rights it may have at law or in equity against Tenant for its failure to surrender the Existing Premises to Landlord on the Termination Date.

§18. General Conditions.

§18.1. Non-Discrimination. Landlord and Tenant agree to comply with the non-discrimination in employment policies in County contracts as required by Section 11B-3 and Section 27-19 of the Montgomery County Code 1994, as amended, as well as all applicable state and federal laws and regulations regarding employment discrimination. Landlord and Tenant agree that they do not and will not discriminate in any manner on the basis of age, color, race, religion, belief, sexual preference or handicap.

§18.2. Public Employment. Landlord understands that unless authorized under Section 11B-52 and Chapter 19A of the Montgomery County code, 1994, it is unlawful for any person transacting business with Montgomery County, Maryland to employ a public employee for employment contemporaneously with his or her public employment.

§18.3. The terms of the Lease shall be interpreted under the laws of the State of Maryland. If any term of this Lease or any application thereof shall be invalid or unenforceable, the remainder of this Lease and any other application of such terms shall not be affected thereby.

§18.4. This Lease is subject to the appropriation of funds. If funds are not appropriated, for any reason whatsoever, this Lease will terminate on July 1 of such year. Tenant shall give Landlord at least forty-five (45) days prior written notice of lack of appropriation.

~~B. Partnership or Individual Tenant (Note: For general and limited partnerships, all general partners shall sign this Lease.)~~

TENANT:

WITNESS:

_____ _____

_____ _____

_____ _____

_____ _____

Corporate Tenant's Acknowledgement

State of _____)
County of _____)

I certify that on this date of _____, 19__, _____, as the _____ President of Montgomery County, Maryland personally well known to me (or satisfactorily proven) to be the person who executed the foregoing instrument, acknowledged before me that _he holds the title set forth above and that _he executed the instrument on behalf of the corporation by proper authority and as the act of the corporation for the purposes therein stated.

_____
Notary Public with authority in the jurisdiction above

My Commission Expires: _____

~~Partnership or Individual Tenant's Acknowledgement~~

State of _____)
)
County of _____)

I certify that on this date of _____, 19__, _____, personally well known to me (or satisfactorily proven) to be the person who executed the foregoing instrument, acknowledged before me that _he executed the instrument for the purposes therein stated.

_____
Notary Public with authority in the jurisdiction above

My Commission Expires: _____

CSX TRANSPORTATION, INC.

APPROXIMATE LOCATION OF FUTURE MIDDLE STREET (80' R/W) PER MNCPPC STUDIES

NOT INCLUDED IN PROJECT PLAN

ANY IMPACTS TO STORE, PARKING ETC., WILL BE SUBJECT TO APPROVAL OF LEASE HOLDER (LEVITZ).

LEVITZ
LEVITZ FURNITURE
SHOWROOM & WAREHOUSE

SPORTS AUTHORITY

GIANT FOOD STORE

MONTROSE CROSSING
ROCKVILLE ELECTION DISTRICT NO. 4
MONTGOMERY COUNTY, MARYLAND
LAND USE PLAN
EXHIBIT D

EXHIBIT A
LEASED PREMISES
SPACE A-7 BUILDING A
46,70 SQUARE FEET

MARC DRIVE

ROAD

LEASED PREMISES

PEDESTRIAN PATH

ROCKVILLE

PIKE

GATEWAY FEATURE

TREE SAVE AREA

APPLICANT

LAND USE PLAN

EXHIBIT D

MONTROSE CROSSING
ROCKVILLE ELECTION DISTRICT NO. 4
MONTGOMERY COUNTY, MARYLAND

RGA

EXHIBIT 'B'
BUILDING 'A'
STANDARD LANDLORD'S SPECIFICATIONS
MONTROSE CROSSING, ROCKVILLE, MARYLAND
TENANT A-7
MONTGOMERY COUNTY LIQUORS

1. CONSTRUCTION BY LANDLORD

Landlord to construct Tenant's Stock Room wall and stockroom door as shown on the Lease Oultine Drawing. Tenant to reimburse Landlord for construction costs of stock room wall and door.

A. STORE MEASUREMENTS:

1. Depths shall be measured from outside face of exterior front walls (front lease line) to outside face of exterior rear walls, not common with another tenant or to center line of rear walls common with another tenant (rear lease lines).

2. Widths shall be measured from center lines of interior side walls common with other tenants or from outside face of exterior side walls not common with another tenant (side lease lines).

B. EXTERIOR FRONTS:

1. Clear plate glass from 0'-8" above finished floor to 10'-0" above finished floor, set in clear anodized, tubular aluminum frames. Tempered clear plate glass shall be provided in windows within 5 feet of entrance door.

2. Entrance door shall be a 3 foot by 7 foot single acting prefinished, tubular aluminum framed tempered plate glass door with automatic closer, push and pull bars, cylinder lock and hold-open device.

3. Refer to Exhibit D, Item 10 for House Address numerals.

C. EXTERIOR REAR:

1. Wall of 12" Split Face CMU.

2. Service door shall be a painted 3 foot by 7 foot hollow metal door with painted metal rain diverter over door. Frame shall be a painted, 2" pre-welded hollow metal. Door shall be equipped with lever-type entrance lock and automatic door closer.

3. Refer to Exhibit D, Item 11 for Rear Door Signs.

D. EXTERIOR SIDES:

1. Wall of Split Face CMU and Synthetic Stucco on metal stud framing system.

E. INTERIOR FRONT WALL:

1. Windows shall be clear plate glass from 0'-8" above finished floor to 10'-0" above finished floor set in clear anodized, tubular aluminum frames. Tempered clear plate glass shall be provided in windows within 5 feet of entrance door.

F. INTERIOR SIDE WALLS:

1. Demising walls between stores shall be 1-hour fire rated UL assembly (UL design 468) of one (1) layer, 1/2-inch gypsum wallboard taped, spackled and screw applied to each side of 3-5/8-inch steel studs from floor to underside of roof or steel beam above; sanded, ready for Tenant finish, where exposed below finished ceiling. Do not paint. Walls shall have 3" sound attenuating blankets full height.

G. INTERIOR REAR WALL: Rear walls of any leased premises common with exterior walls to be constructed of concrete masonry units filled with koreform styrofoam insulation from floor to underside of roof deck.

H. INTERIOR FLOORINGS: One hundred percent of the floor shall be exposed, trowel finished concrete slab ready for Tenant finish. (Toilet Room to have VCT 100%, see J-10 below.)

I. INTERIOR CEILING: Exposed painted metal 2 foot by 4 foot grid system with white fiberglass lay-in panels, throughout entire store, at a height of 10'-0" above finished floor.

J. TOILET ROOM LOCATED AT REAR WALLS:

1. One space enclosed with 1/2-inch gypsum wallboard screw applied to steel studs, taped, spackled and sanded from floor to finished ceiling. Do not paint.

2. Door to be a 3 foot by 6 foot 8 inch hollow core wood door, pre-hung and fitted standard H/C hardware. Under cut door 1" for ventilation.

3. A white H/C lavatory with standard fittings.

4. A white water closet with standard fittings.

5. Handicap grab bars as indicated on drawings.

6. A wall mounted tissue holder.

7. A ten-gallon electric hot water heater mounted above ceiling.

8. A thru wall exhaust fan connected to light switch.

9. A wall light above lavatory with wall switch located near door.

10. White VCT floor tile with 4" vinyl cove base.

11. 24 x 36 surface mounted mirror.

K. PLUMBING:

1. Plumbing for toilet facilities above provided by Landlord. Landlord shall provide one additional capped service of all plumbing for future Tenant use. Tenant shall bear the cost of the design and installation of all additional plumbing required as a result of his leasehold improvements. All tenant improvements shall conform with Landlord's Mechanical and Electrical Performance specification.

2. All interim sewer service charges or area connection charges required in addition to those listed in section "TOILET ROOM LOCATED AT REAR WALL" are to be at tenant's expense.

3. Water meter is to be located in accordance with governing county standard detail.

L. FIRE PROTECTION: Landlord to provide sprinkler system in accordance with the fire protection specifications. Tenant shall bear the cost of the design and installation of all additional heads and/or relocation of heads required as a result of his leasehold improvements. All Tenant improvements shall conform with Landlord's Mechanical and Electrical Performance specification.

M. HEATING, VENTILATING AND AIR CONDITIONING SYSTEMS:

1. The entire air distribution system (both supply and return) and toilet room exhaust with exterior wall grill shown on drawings has been designed by Landlord's architect and is to be located above the ceiling. All supply air ducts are to be fabricated to the sizes indicated, installed where shown on drawings. Tenant shall bear the cost of the design and installation of all additional HVAC required as a result of his leasehold improvements. All Tenant improvements shall conform with Landlord's Mechanical and Electrical Performance specification.

2. The heating system is designed to maintain a 68 degree F. indoor temperature at a 17 degree F. outdoor temperature.

3. The cooling system is capable of maintaining a 78 degree F. indoor temperature at a 95 degree F. outdoor temperature. The cooling system capacity design is based on the following internal heat gains:

a. People load - 400 BTU's per hour, per person, at 75-square feet per person.

b. Lighting load - 2 watts per square foot of lease space.

c. No provision has been made for heat producing equipment of any type (e.g., self-contained refrigerators, water coolers, cooking equipment, etc.). Furthermore, no provision has been made for mechanical ventilation systems (e.g., cooking equipment exhaust hoods).

4. The roof top equipment and their rated capacities, to be supplied by the landlord, are as follows:

TENANT	RTU NO.	AIR QTY. (CFM)	TOTAL COOLING CAPACITY (TONS) AT 80/67 AT 95	HEATING CAPACITY (BTUH)	
				INPUT	OUTPUT
A-1					
A-2	K	1,200	37.4	80	62
A-4	F	4,000	125.0	150	120
A-5	J	2,000	62.5	90	73
A-6	H	2,500	75.0	120	97
A-7	D	6,000	183.0	250	203

NOTE: All RTU's are electric cooling and gas heat.

5. All equipment is 208V, three phase.

6. Any increase in the heating and cooling capacity and/or any required ventilation systems, which are a result of the tenant's proposed use of the leased space beyond the design loads and capacities listed above, shall be attributable thereto, including but not limited to roof penetrations, roofing, structural supports, modifications to mechanical, plumbing, electrical and fire protection systems as provided under construction by landlord as described on the drawings and in these specifications, shall be borne by the tenant.

N. ELECTRICAL:

1. Electrical panel box to be mounted on interior rear wall and is to be rated for 120/208V, three phase, 4 wire, 60 cycle, service. Service is to be as follows:

A-1	600 Amps	A-5	400 Amps
A-2	200 Amps	A-6	400 Amps
A-4	200 Amps	A-7	400 Amps

2. Interior Lighting - Recessed 2 foot by 4 foot, lensed, four tube, fluorescent fixtures arranged as illustrated on the Tenant lease outline drawing.

3. Emergency Lighting - Wall mounted, battery powered lamp units to be located at front and rear of the leased space. Battery is to recharge automatically. Units are to automatically switch on when normal power is interrupted and are to automatically switch off when normal power is restored.

4. An illuminated exit sign to be surface mounted to the ceiling over the front and rear doors. Exit signs to be served by a separate electrical circuit with emergency white lights that provide a safe exit way from rear to front of leased space.

5. Exterior Light Over Rear Door -

6. Electrical service to signage location shall be one junction box mounted at exterior sign fascia and one junction box inside the Tenant space for use by Tenant's signage contractor. Conduit with pull string shall extend between junction boxes and run from interior junction box to Tenant panel.

7. A separate meter shall be located on exterior rear wall of Tenant A-7.

8. Tenant shall bear the cost of the design and installation of all additional electrical required as a result of his leasehold improvements. All Tenant improvements shall conform with Landlord's Mechanical and Electrical Performance specification.

O. TELEPHONE SERVICE: The landlord will provide and install two (2) 1-inch diameter conduits to Tenant lease space. Tenant shall bear the cost of the design and installation of all additional service required as a result of his leasehold improvements. All Tenant improvements shall conform with Landlord's Mechanical and Electrical Performance specification.

P. CONSTRUCTION CHANGES:

1. Costs of tenant changes and/or additions to work included in these specifications, which are requested by the tenant to be performed by the landlord at the tenant's expense, shall be estimated by the landlord when tenant's drawings are submitted for landlord's approval.

2. There will be no credits due for tenant required deletions or substitutions to these specifications.

Q. CONSTRUCTION STAGING AREAS: At the time of possession of Tenant space, Landlord shall stipulate each Tenant's construction staging area.

2. TENANT LEASEHOLD IMPROVEMENTS:

A. Tenant will supply four (4) sets of construction documents, including architectural, mechanical, electrical, sprinkler and plumbing, in a completed form, ready for filing for an alteration permit. Said documents shall be the property of the landlord to be used for his review. Floor plans are to be dimensioned.

B. Tenant shall apply and obtain all alterations permits, use permits, occupancy permits and other permits required by jurisdiction having authority. Tenant shall pay all required fees.

C. All other work or material required to meet any governmental codes or called for by tenant is at tenant's expense.

D. SIGNAGE:

1. Tenant is to provide, install and bear all costs for their signage, approved by the landlord. Signage shall be mounted on an area designated on the face of the building.

2. Signage requirements are detailed in Exhibit D, Sign Specification.

3. Tenant to submit four (4) sets of fabrication and installation store drawings for approval prior to installation as stipulated in Signage Exhibit.

4. Tenant to apply, obtain and pay for all permits required by jurisdiction having authority.

EXHIBIT 'D'
BUILDING 'A' SIGN SPECIFICATION
MONTROSE CROSSING, ROCKVILLE, MARYLAND

Comply strictly with these specifications and attached drawings. Neither deviations nor substitutions will be permitted without Landlord's written approval.

1. FABRICATION - All illuminated signage is to be designed and fabricated to comply with the jurisdictional sign and building codes, the National Electrical Code NFPA 70 and requirements of Underwriter's Laboratories. Illuminated signage to have U.L. label permanently affixed and visible.

2. SIGN PERMIT - Tenant to obtain necessary approval and sign permit, one copy of which is to be submitted to the Landlord. Permanently affix permit plaque to the sign in a location visible from the ground.

3. ILLUMINATED SIGNAGE DESIGN - Individual letters, logos, etc. are to be fabricated from minimum 0.040 inch aluminum sides and minimum 0.040 inch mill finished backs. Sides to be painted to match adjacent EIFS surface. All interiors are to be painted white. Faces are to be minimum 1/8 inch thick plexiglass in color to be approved by Landlord. Molding caps are to be 1 inch black silvatrim. Total sign depth to be 5.5 inches, plus or minimum 1/2 inch.

4. INTERIOR ILLUMINATION - A minimum of two rows of 15mm white neon tubes are to be installed. Additional rows of neon are to be added where size of sign dictates. Signage to be powered by 60 MA. transformers.

5. TRANSFORMER VAULT/RACEWAY - Mount signage to a continuous 7.5 inch x 7.5 inch vault fabricated from a minimum 0.063 inch aluminum. Paint vault to match adjacent EIFS surface. Secure entire assembly to assigned location on the building facade. See sign drawings for raceway/letter relationship and mounting dimensions on fascia.

6. ILLUMINATED SIGN DIMENSIONS - The maximum height of signage is to be no more than 18 inches; the minimum height to be no less than 12 inches. In no case shall the ends of signage be less than 4 feet from signage of an adjoining store. The maximum square foot area of signage shall conform to the following schedule.

Sign Schedule

Tenant	Maximum SF Allowed
A-1	60
A-2	40
A-4	40
A-5	40
A-6	40
A-7	60

7. ELECTRICAL SERVICE - Each sign location shall be provided with two junction boxes, one in the Tenant space and one at the building fascia, for use in installing and wiring the Tenant sign to the Tenant electrical panel board. Tenant sign shall be circuited through a 7 day, 24 hour time clock located in Landlord's Electrical room in accordance with operating hours established by the Landlord.

8. SHOP DRAWINGS - Tenant shall submit four (4) copies of blue line prints of all fabrication drawings of signage showing all graphics, construction details, types of materials, finishes and installation details, complete, for review and approval prior to fabrication.

9. WINDOW SIGNS - Signs permanently affixed to interior of store windows and/or doors must be approved by Landlord prior to installation by the Tenant.

10. HOUSE ADDRESS - Furnished and installed by Landlord on entrance doors; 8" reverse painted gold numbers.

11. REAR DOOR SIGNS - Furnished and installed by Landlord.

EXHIBIT E

DECLARATION OF OCCUPANCY

DATE OF DECLARATION: _____, 19 96

DATE OF LEASE: _____, 19 96

LANDLORD: Montrose Crossing, Inc.; By:
GFS Realty, Inc., (Dept. #671)
P. O. Box 1804 agent
Washington, D.C. 20013

TENANT: Montgomery County, Maryland (Department of Facilities and Services)
c/o Department of Facilities and Services
110 North Washington Street
Rockville, Maryland 20850

CENTER: Flagship Center, consisting of those parcels of land located in Montgomery County, Maryland, as shown on Exhibit A hereto, as the same may be altered, reduced, expanded or replaced from time to time.

Under §3.6 of the Lease, Landlord and Tenant agreed to sign this Declaration of Occupancy. Accordingly, Landlord and Tenant declare that:

1. The Possession Date under the Lease is _____, 19___.

2. The Rent Commencement Date under the Lease is _____, 19__.

3. Not counting Options to Extend, if any, the Lease Term expires on _____ ____, 19___.

4. Landlord's Work (as defined in the Lease) has been satisfactorily completed by Landlord and accepted by Tenant.

5. As of the date of this Declaration, Tenant has no claims, defenses, or rights of set-off against rent and additional rent due under the Lease.

6. The Lease is now in full force and effect.

ATTEST: LANDLORD: GFS REALTY, INC.

_____ _____

David B Sykes, Secretary Stephen L. Oseroff, Vice President, duly authorized

A. Corporate Tenant

ATTEST: TENANT: MONTGOMERY COUNTY, MARYLAND (Department of Facilities and Services)

By: _____ By: _____
Name: _____ Name: _____
Title: _____ Title: _____

~~B. Partnership or Individual Tenant (Note: for general and limited partnerships, all general partners shall sign this Lease.)~~

WITNESS: TENANT: _____

_____ _____

_____ _____

Rev. 9/88
SCDECOCC.GFM:09/29/1988:DLM

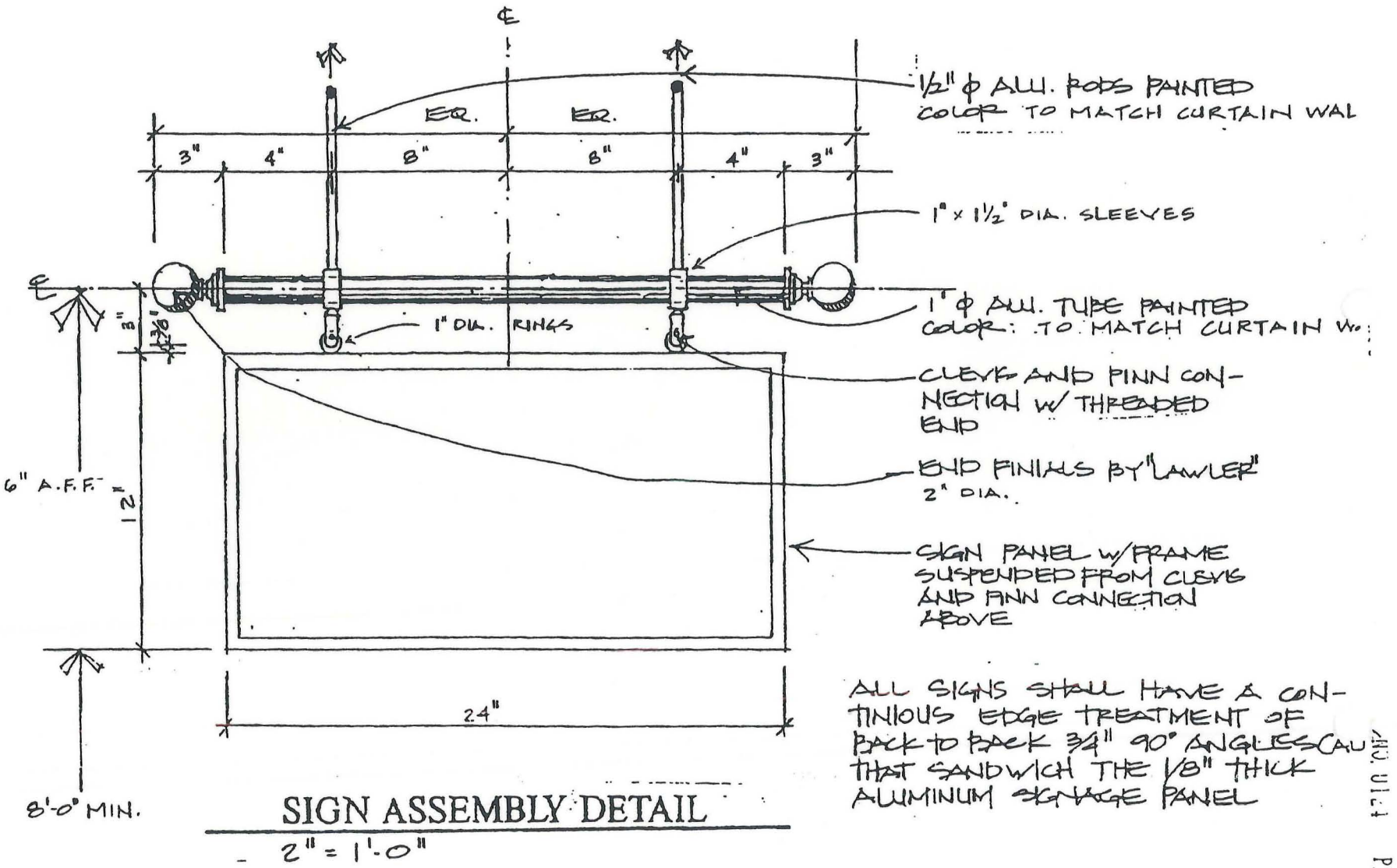

ALL SIGNS SHALL HAVE A CONTINIOUS EDGE TREATMENT OF BACK TO BACK 3/4" 90° ANGLES CAU THAT SANDWICH THE 1/8" THICK ALUMINUM SIGNAGE PANEL

SIGN ASSEMBLY DETAIL

2" = 1'-0"

TENANT BLADE SIGN
MONTROSE CROSSING ROCKVILLE MARYLAND

REV. 11-1-1

EXHIBIT G

Area of Future Dedication

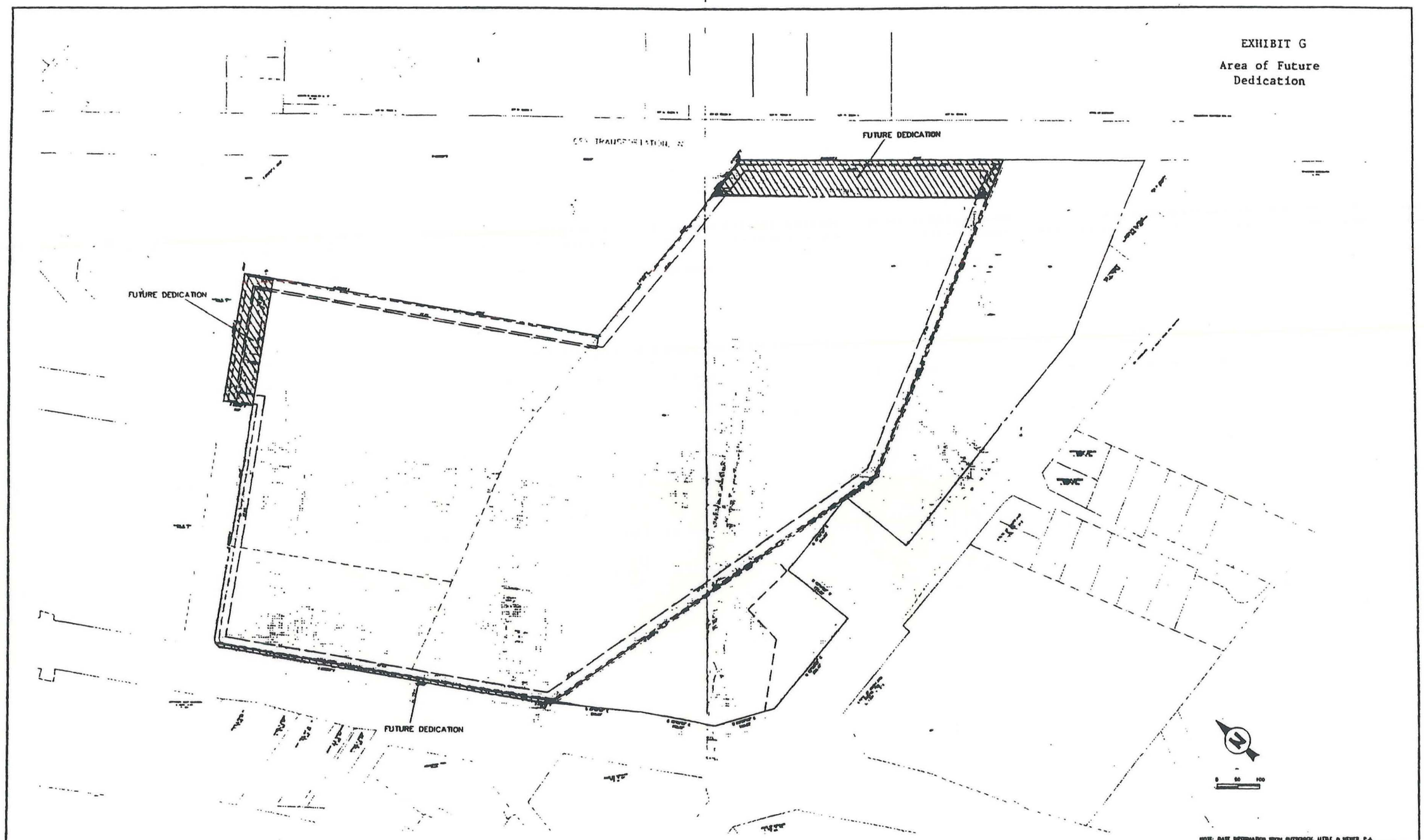

NOTE: BASE INFORMATION FROM RUTSCHOCK, LITTLE & WEBER, P.A. SUPPLEMENTED BY FIELD SURVEY WORK OF RODGERS & ASSOCIATES, INC.

REVISION	DATE	REVISION	DATE

MONTROSE CROSSING, INC.
P.O. BOX 5[illegible]
WASHINGTON, D.C. [illegible]

EXISTING MONTROSE CROSSING WITH FUTURE ROAD DEDICATION

MONTROSE CROSSING
"FLAGSHIP CENTER"

R&A
LAND USE EVALUATION • PLANNING
CIVIL ENGINEERING • SURVEYING
ENVIRONMENTAL/NATURAL RESOURCES
RODGERS & ASSOCIATES, INC.

	BY	DATE
BASE DATA	IPD/CADD	10-1984
DESIGNED	DBA	2-1985
DRAWN	IPD/CADD	2-1985

SCALE: 1" = [illegible]

JOB No. [illegible]

7. ELECTRICAL SERVICE - Each sign location shall be provided with two junction boxes, one in the Tenant space and one at the building fascia, for use in installing and wiring the Tenant sign to the Tenant electrical panel board. Tenant sign shall be circuited through a 7 day, 24 hour time clock located in Landlord's Electrical room in accordance with operating hours established by the Landlord.

8. SHOP DRAWINGS - Tenant shall submit four (4) copies of blue line prints of all fabrication drawings of signage showing all graphics, construction details, types of materials, finishes and installation details, complete, for review and approval prior to fabrication.

9. WINDOW SIGNS - Signs permanently affixed to interior of store windows and/or doors must be approved by Landlord prior to installation by the Tenant.

10. HOUSE ADDRESS - Furnished and installed by Landlord on entrance doors; 8" reverse painted gold numbers.

11. REAR DOOR SIGNS - Furnished and installed by Landlord.

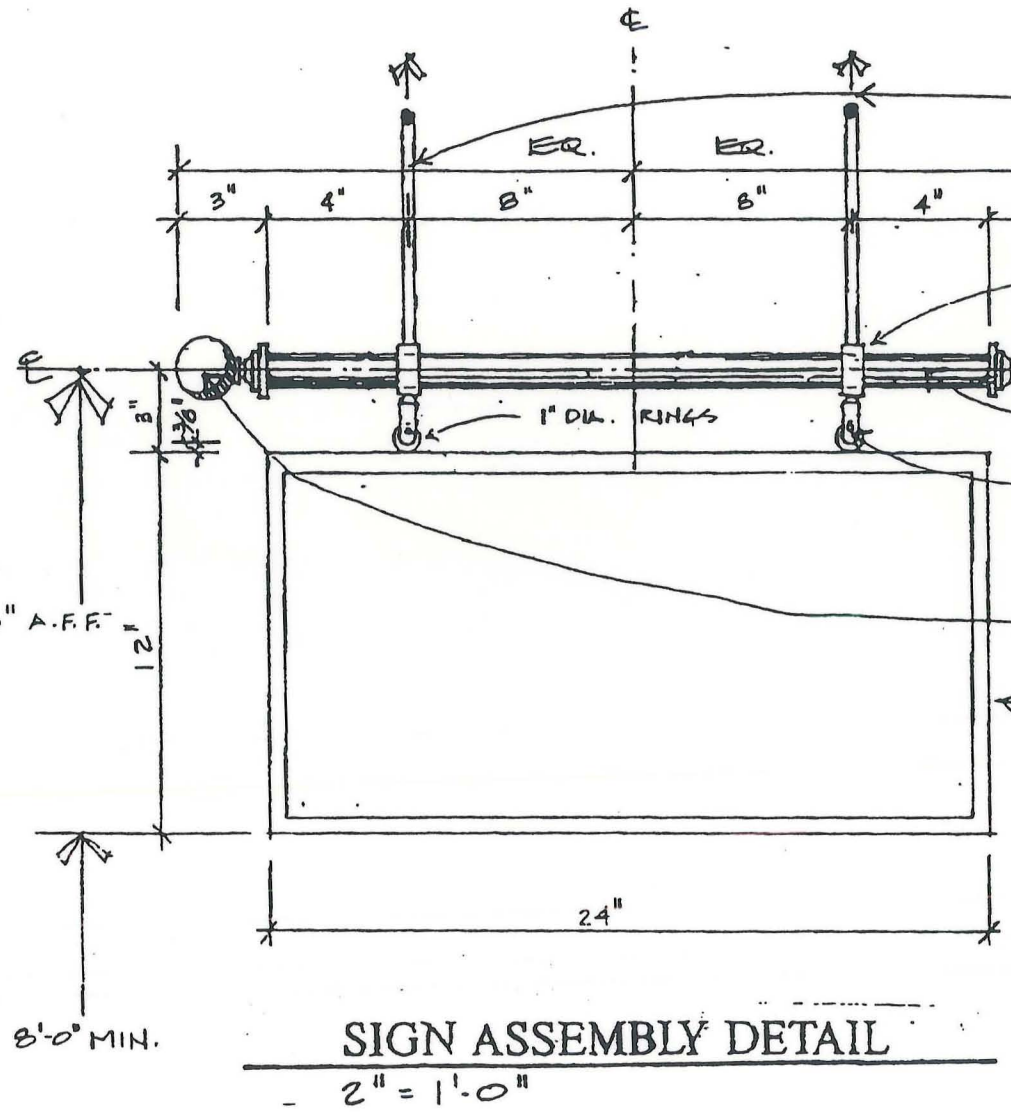

ALL SIGNS SHALL HAVE A CONTINIOUS EDGE TREATMENT OF BACK TO BACK 3/4" 90° ANGLES C THAT SANDWICH THE 1/8" THICK ALUMINUM SIGNAGE PANEL

SIGN ASSEMBLY DETAIL

2" = 1'-0"

TENANT BLADE SIGN
MONTROSE CROSSING ROCKVILLE MARYLAND

REV. 01-1 P. 4/4