AERIAL TOWER 729
DIMENSIONS & TURNING INFORMATION

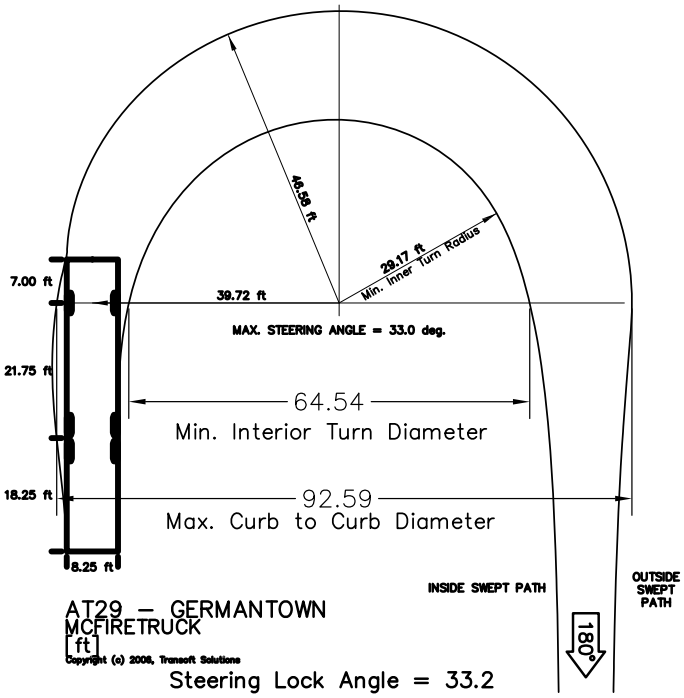

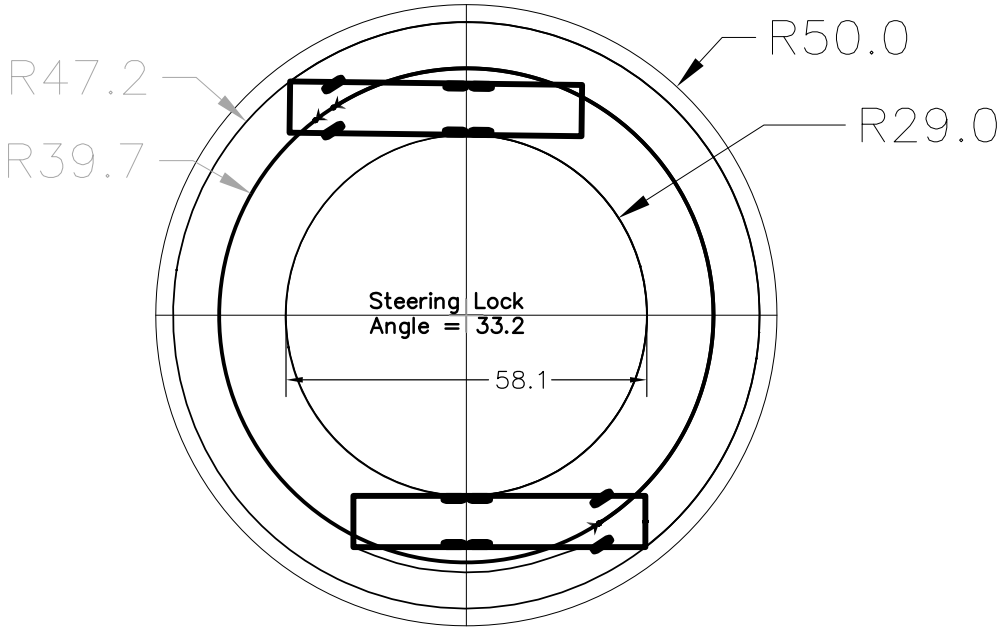

CREATED FOR MCFRS CODE ENFORCEMENT BY MACRIS, HENDRICKS & GLASCOCK, P.A.